SHARP SERVICE MANUAL

No. S5930CDPC671H

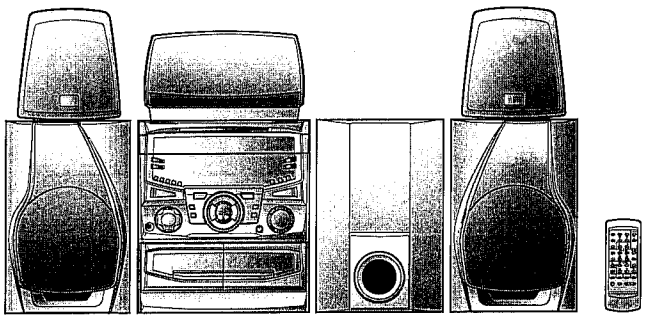

Illustration: CD-PC671H

CD-PC671H

CD-PC671H mini component system consisting of CD-PC671H (main unit), CP-C671H (front speakers), CP-SW671H (sub woofer), GBOXS0026AWM1 (center speaker) and GBOXS0027AWM1 (surround speakers).

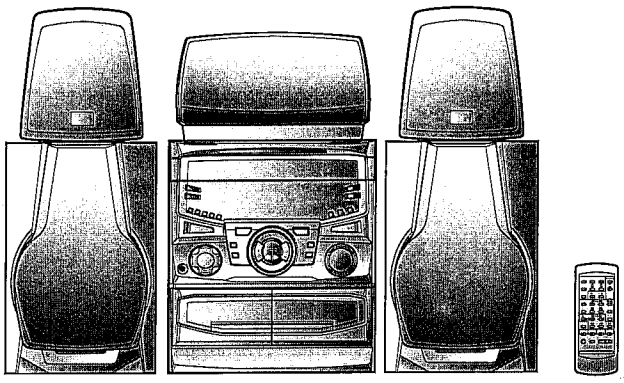

Illustration: CD-PC651H

CD-PC651H

CD-PC651H mini component system consisting of CD-PC651H (main unit), CP-C651H (front speakers), GBOXS0026AWM1 (center speaker) and GBOXS0027AWM1 (surround speakers).

- In the interests of user-safety the set should be restored to its original condition and only parts identical to those specified be used.

- **Note for users in U.K.**
  Recording and playback of any material may require consent which SHARP is unable to give. Please refer particularly to the provisions of Copyright Act 1956, the Dramatic and Musical Prefomers Protection Act 1956, the Preformers Protection Acts 1963 and 1972 and to any subsequent statutory enactments and orders.

COMPACT disc DIGITAL AUDIO

SAVING ENERGY STAND-BY POWER CONSUMPTION 0.6W

R·D·S EON

CONTENTS

	Page
SAFETY PRECAUTION FOR SERVICE MANUAL	2
IMPORTANT SERVICE NOTES (FOR U.K. ONLY)	2
SPECIFICATIONS	3
NAMES OF PARTS	4
OPERATION MANUAL	7
DISASSEMBLY	8
REMOVING AND REINSTALLING THE MAIN PARTS	11
ADJUSTMENT	11
NOTES ON SCHEMATIC DIAGRAM	18
BLOCK DIAGRAM	19
SCHEMATIC DIAGRAM / WIRING SIDE OF P.W.BOARD	22
VOLTAGE	46
WAVEFORMS OF CD CIRCUIT	47
TROUBLESHOOTING (CD SECTION)	48
FUNCTION TABLE OF IC	53
FL DISPLAY	60
WIRING OF PRIMARILY SUPPLY LEADS (FOR U.K. ONLY)	61
PARTS GUIDE/EXPLODED VIEW	
PACKING METHOD (FOR U.K. ONLY)	

DIFFERENCE BETWEEN CD-PC671H AND CD-PC651H

	CD-PC671H	CD-PC651H
Sub woofer	○	×

SHARP CORPORATION

This document has been published to be used for after sales service only.
The contents are subject to change without notice.

SAFETY PRECAUTION FOR SERVICE MANUAL

Precaution to be taken when replacing and servicing the Laser Pickup.

The AEL (Accessible Emission Level) of Laser Power Output for this model is specified to be lower than Class I Requirements. However, the following precautions must be observed during servicing to protect your eyes against exposure to the Laser beam.

(1) When the cabinet has been removed, the power is turned on without a compact disc, and the Pickup is on a position outer than the lead-in position, the Laser will light for several seconds to detect a disc. Do not look into the Pickup Lens.
(2) The Laser Power Output of the Pickup inside the unit and replacement service parts have already been adjusted prior to shipping.
(3) No adjustment to the Laser Power should be attempted when replacing or servicing the Pickup.
(4) Under no circumstances look directly into the Pickup Lens at any time.
(5) CAUTION - Use of controls or adjustments, or performance of procedures other than those specified herein may result in hazardous radiation exposure.

(For U.K.)

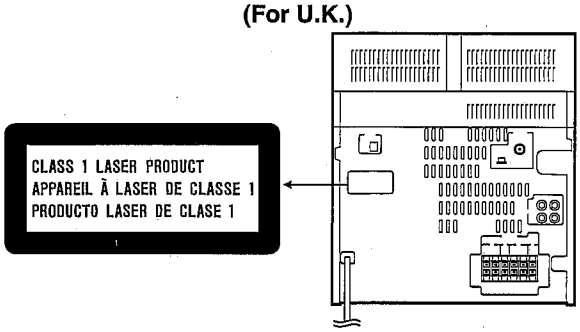

Laser Diode Properties
Material: GaAlAs
Wavelength: 780 nm
Emission Duration: continuous
Laser Output: max. 0.6 mW

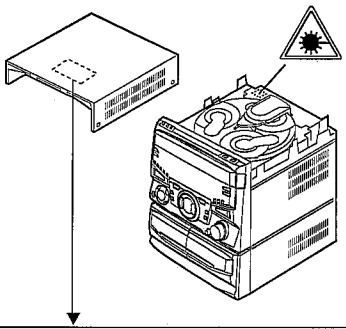

CAUTION-INVISIBLE LASER RADIATION WHEN OPEN. DO NOT STARE INTO BEAM OR VIEW DIRECTLY WITH OPTICAL INSTRUMENTS.

VARNING-OSYNLIG LASERSTRÅLNING NÄR DENNA DEL ÄR ÖPPNAD. STIRRA EJ IN I STRÅLEN OCH BETRAKTA EJ STRÅLEN MED OPTISKA INSTRUMENT.

ADVERSEL-USYNLIG LASERSTRÅLING VED ÅBNING. SE IKKE IND I STRÅLEN-HELLER IKKE MED OPTISKE INSTRUMENTER.

VARO! AVATTAESSA OLET ALTTIINA NÄKYMÄTÖN LASERSÄTEILYLLE. ÄLÄ TUIJOTA SÄTEESEEN ÄLÄKÄ KATSO SITÄ OPTISEN LAITTEEN LÄPI.

VARNING-OSYNLIG LASERSTRÅLNING NÄR DENNA DEL ÄR ÖPPNAD. STIRRA EJ IN I STRÅLEN OCH BETRAKTA EJ STRÅLEN GENOM OPTISKT INSTRUMENT.

ADVERSEL-USYNLIG LASERSTRÅLING NÅR DEKSEL ÅPNES. STIRR IKKE INN I STRÅLEN ELLER SE DIREKTE MED OPTISKE INSTRUMENTER.

VAROITUS! LAITTEEN KéYTTéMINEN MUULLA KUIN TéSSé KéYTTô OHJèESSA MAINITULLA TAVALLA SAATTAA ALTISTAA KéYTTéJéN TURVALLISUUSLUOKAN 1 YLITTéVéLLE NéKYMéTTômélLE LASERSéTEILYLLE.

VARNING - OM APPARATEN ANVéNDS Pè ANNAT SéTT éN I DENNA BRUKSANVISNING SPECIFICERAS. KAN ANVéNDAREN UTSéTTAS FôR OSYNLIG LASERSTRèLNING, SOM ôVERSKRIDER GRéNSEN FôR LASERKLASS 1.

(Except for U.K.)

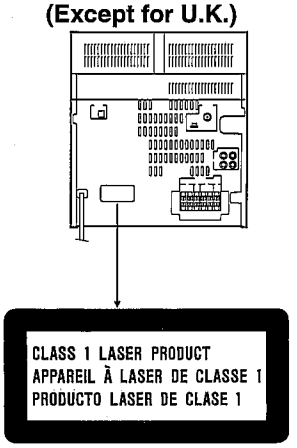

LASER KLASSE 1
LUOKAN 1 LASERLAITE
KLASS 1 LASERAPPARAT
LASER TŘÍDY 1
LASER TRIEDY 1

IMPORTANT SERVICE NOTES (FOR U.K. ONLY)

Before returning the unit to the customer after completion of a repair or adjustment it is necessary for the following withstand voltage test to be applied to ensure the unit is safe for the customer to use.
Setting of Withstanding Voltage Tester and set.

Set name	set value
Withstanding Voltage Tester	
Test voltage	4,240 VPEAK 3,000 VRMS
Set time	6 secs
Set current(Cutoff current)	4 mA
Unit	
Judgment	

OK: The "GOOD" lamp lights.
NG: The "NG" lamp lights and the buzzor sounds.

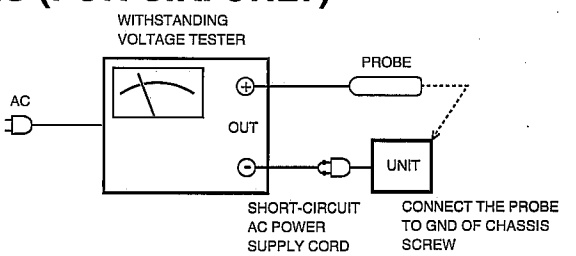

FOR A COMPLETE DESCRIPTION OF THE OPERATION OF THIS UNIT, PLEASE REFER TO THE OPERATION MANUAL.

SPECIFICATIONS

CD-PC671H/651H

● General

Power source:	AC 230 V, 50 Hz
Power consumption:	140 W
Dimensions:	Width; 270 mm (10-5/8") Height; 300 mm (11-13/16") Depth; 362 mm (14-1/4")
Weight:	8.1 kg (17.7 lbs.)

● Amplifier section

Output power:	Front speakers; RMS; 80 W (40 W + 40 W) (10 % T.H.D.) RMS; 72 W (36 W + 36 W) (0.9 % T.H.D.) Center speaker; RMS; 20 W (10 % T.H.D) RMS; 14 W (0.9 % T.H.D) Surround speakers; RMS; 20 W (10 W + 10 W) (10 % T.H.D.) RMS; 14 W (7 W + 7 W) (0.9 % T.H.D.) Sub woofer; RMS; 40 W (10 % T.H.D) RMS; 32 W (0.9 % T.H.D)
Output terminals:	Front speakers; 6 ohms Centre speaker; 4 ohms Surround speakers; 8 ohms Sub woofer; 6 ohms Headphones; 16-50 ohms (recommended; 32 ohms) CD digital output (optical)
Input terminals:	Video/Auxiliary (audio signal) × 2; 500 mV/47 kohms

● Compact disc player section

Type:	3-disc multi-play compact disc player
Signal readout:	Non-contact, 3-beam semi-conductor laser pickup
D/A converter:	1-bit D/A converter
Frequency response:	20 - 20,000 Hz
Dynamic range:	90 dB (1 kHz)

● Tuner section

Frequency range:	FM; 87.5-108 MHz AM; 522-1,620 kHz

● Cassette deck section

Frequency response:	50-14,000 Hz (Normal tape)
Signal/noise ratio:	55 dB (TAPE 1, playback) 50 dB (TAPE 2, recording/playback)
Wow and flutter:	0.15 % (WRMS)

● Front speaker section

CP-C671H

Type:	3-way type [13 cm (5-1/4") woofer, 5 cm (2") tweeter and super tweeter]
Maximum input power:	80 W
Rated input power:	40 W
Impedance:	6 ohms
Dimensions:	Width; 200 mm (7-7/8") Height; 300 mm (11-13/16") Depth; 254 mm (10")
Weight:	2.9 kg (6.3 lbs.)/each

● Front speaker section

CP-C651H

Type:	2-way type [13 cm (5-1/4") woofer and 5 cm (2") tweeter]
Maximum input power:	60 W
Rated input power:	30 W
Impedance:	6 ohms
Dimensions:	Width; 200 mm (7-7/8") Height; 300 mm (11-13/16") Depth; 240 mm (9-7/16")
Weight:	2.9 kg (6.3 lbs.)/each

● Center speaker section

GBOXS0026AWM1

Type:	10 cm (4") full-range speaker
Maximum input power:	40 W
Rated input power:	20 W
Impedance:	4 ohms
Dimensions:	Width; 260 mm (10-1/4") Height; 140 mm (5-1/2") Depth; 155 mm (6-1/8")
Weight:	0.9 kg (2.0 lbs.)

● Surround speaker section

GBOXS0027AWM1

Type:	10 cm (4") full-range speaker
Maximum input power:	20 W
Rated input power:	10 W
Impedance:	8 ohms
Dimensions:	Width; 170 mm (6-3/4") Height; 88 mm (3-1/2") Depth; 170 mm (6-3/4")
Weight:	0.5 kg (1.0 lbs.)/each

● Sub woofer section (CD-PC671H Only)

CP-SW671H

Type:	13 cm (5-1/4") full-range speaker
Maximum input power:	80 W
Rated input power:	40 W
Impedance:	6 ohms
Dimensions:	Width; 200 mm (7-7/8") Height; 300 mm (11-13/16") Depth; 310 mm (12-3/8")
Weight:	3.4 kg (7.5 lbs.)

Specifications for this model are subject to change without prior notice.

NAMES OF PARTS

CD-PC671H/651H

■ Front panel

1. Disc Number Selector Buttons
2. Disc Tray
3. Multi Indicator
4. Disc Skip Button
5. Open/Close Button

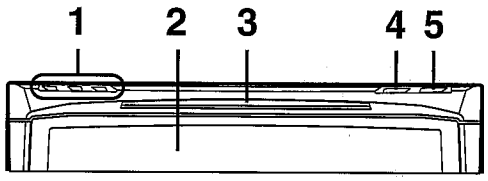

6. Dolby Pro Logic Indicator
7. RDS Indicator
8. Programme Type Indicator
9. Traffic Information Indicator
10. Extra Bass Indicator
11. FM Stereo Mode Indicator
12. FM Stereo Indicator
13. Traffic Programme Indicator
14. Traffic Announcement Indicator
15. (CD) Play Indicator
16. (CD) Pause Indicator
17. Dynamic PTY Indicator
18. EON Indicator
19. (CD) Repeat Indicator
20. (CD) Disc Number Indicators
21. (CD/TUNER) Memory Indicator
22. Timer Play Indicator
23. Timer Record Indicator
24. Spectrum Analyzer/Volume Level Indicator
25. (TAPE 2) Record Indicator
26. Sleep Indicator

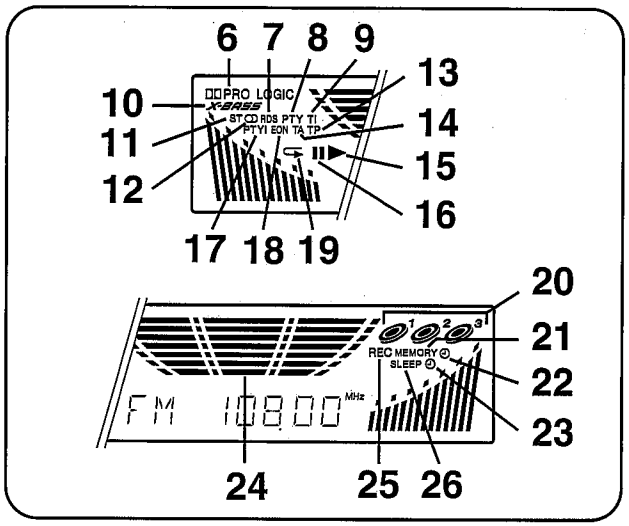

27. Timer Set Indicator
28. (TUNER) Display Mode Selector Button
29. (TUNER) Station Selector Button
30. (TAPE 2) Record Pause Button
31. (CD) Track Down/Review Button
    (TUNER) Preset Down Button
    (TAPE 2) Rewind Button
32. (CD) Track Up/Cue Button
    (TUNER) Preset Up Button
    (TAPE 2) Fast Forward Button
33. Bypass Button
34. Normal Button
35. Timer/Sleep Button
36. Clock Button
37. (TUNER) Programme Type/Traffic Information Search Button
38. (TUNER) EON Button
39. (TUNER) ASPM Button
40. On/Stand-by Button
41. Equalizer Mode Selector Button
42. Dimmer Button
43. Phantom Button
44. Extra Bass/Demo Mode Button
45. Volume Control
46. Headphone Socket
47. Function Selector Buttons
48. Memory/Set Button
49. (CD/TAPE) Stop Button
50. (TAPE) Play Button
    (CD) Play/Repeat Button
51. Tuning and Time Up/Down Buttons
52. Sub Woofer Volume Control

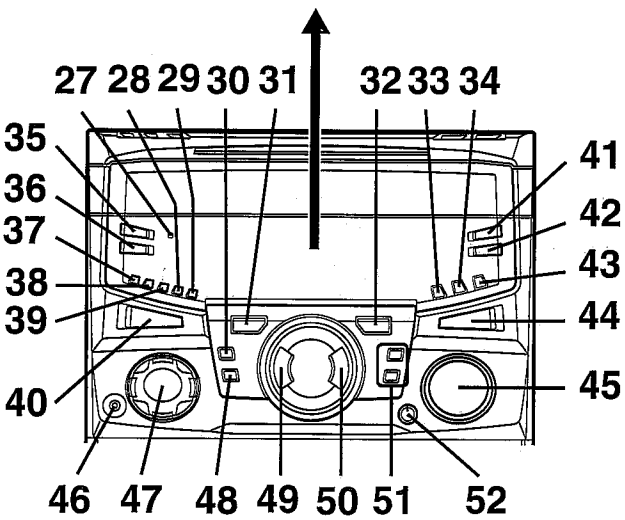

53. (TAPE 1) Cassette Compartment
54. (TAPE 2) Cassette Compartment

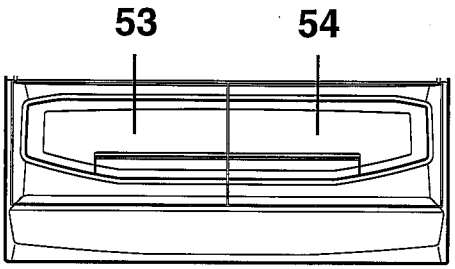

■ Rear panel

1. CD Digital Output Socket
2. AC Power Lead
3. FM 75 Ohms Aerial Socket
4. AM Loop Aerial Socket
5. Video/Auxiliary (Audio Signal) Input Sockets
6. Surround Speaker Terminals
7. Center Speaker Terminals
8. Front Speaker Terminals
9. Sub Woofer Terminals (CD-PC671H Only)

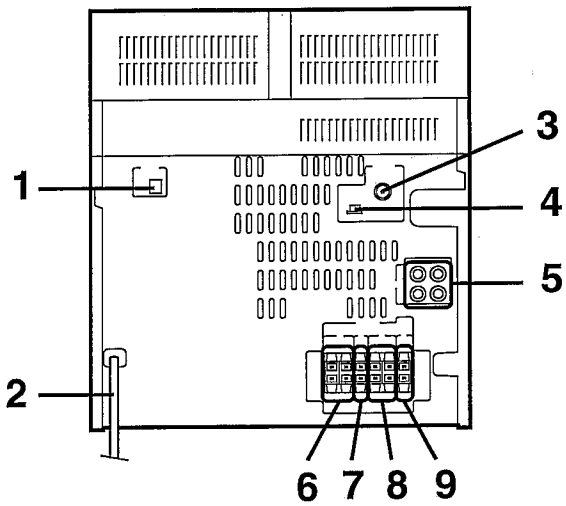

■ Front speaker

CP-C671H

1. Super Tweeter
2. Tweeter
3. Woofer
4. Bass Reflex Duct
5. Speaker Wire

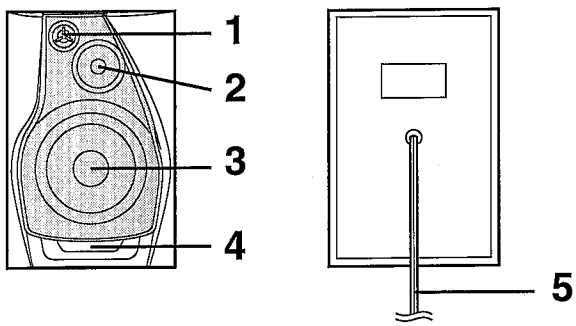

■ Front speakers

CP-C651H

1. Tweeter
2. Woofer
3. Bass Reflex Duct
4. Speaker Wire

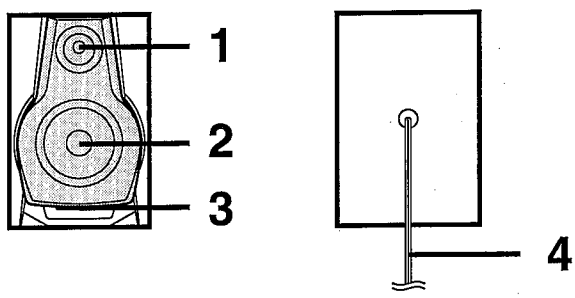

■ Center speaker

GBOXS0026AWM1

6. Full-Range Speaker
7. Speaker Wire

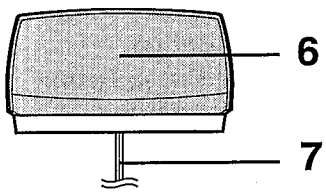

■ Surround speaker

GBOXS0027AWM1

8. Full-Range Speaker
9. Speaker Wire

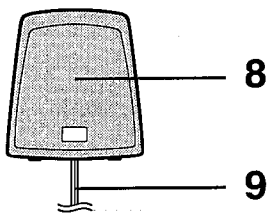

CD-PC671H/PC651H

■ Sub woofer (CD-PC671H Only)

CP-SW671H

10. Woofer
11. Bass Reflex Duct
12. Speaker Wire

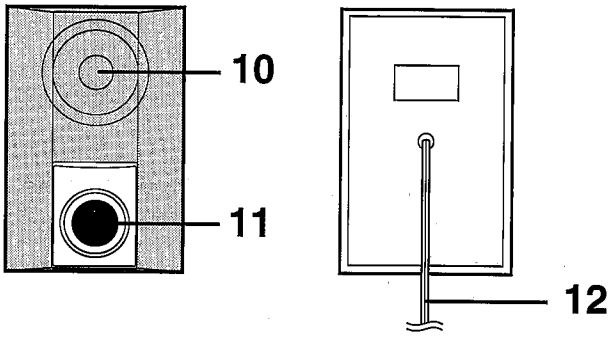

CD-PC671H/PC651H

■ Remote control

1. Remote Control Transmitter LED

2. Surround Level Buttons
3. Center Level Buttons
4. Dolby Pro Logic Button
5. Centre Mode Button
6. Test Tone Button
7. Balance Control Buttons

● Tuner control section

8. Preset Up/Down Buttons

● CD control section

9. Memory Button
10. Pause Button
11. Stop Button
12. Play/Repeat Button
13. Clear Button
14. Track Down/Review Button
15. Random Button
16. Track Up/Cue Button
17. Disc Skip Button

● Tape control section

18. (TAPE 1) Play Button
19. (TAPE 1/2) Stop Button
20. (TAPE 2) Record Pause Button
21. (TAPE 2) Rewind Button
22. (TAPE 2) Play Button
23. (TAPE 2) Fast Forward Button

24. Equalizer Mode Button
25. Function Selector Buttons
26. On/Stand-by Button
27. Extra Bass Button
28. Volume Up/Down Buttons

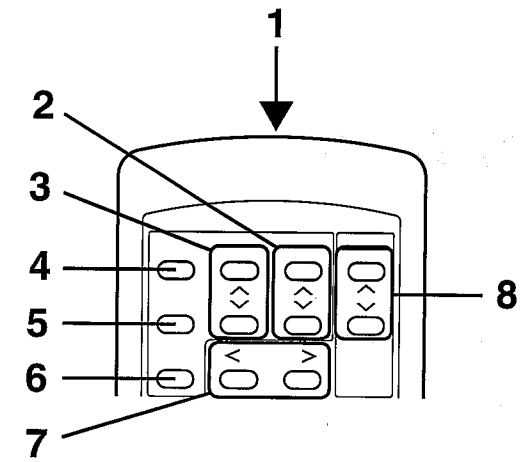

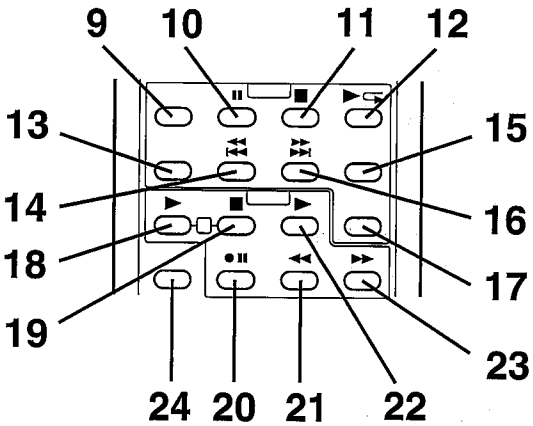

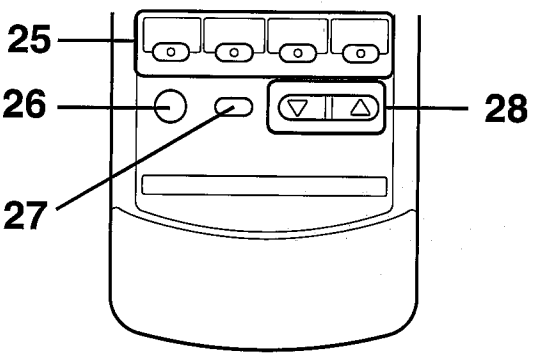

SETTING THE CLOCK

(Main unit operation)

In this example, the clock is set for the 24-hour (0:00) system.

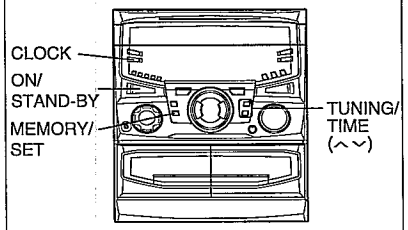

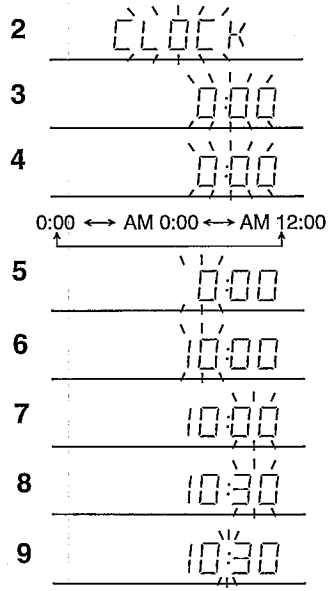

1 Press the ON/STAND-BY button to enter the stand-by mode.

2 Press the CLOCK button.

3 Within 5 seconds, press the MEMORY/SET button.

4 Press the TUNING/TIME (∨ or ∧) button to select the time display mode.

"0:00" → The 24-hour display will appear. (0:00 - 23:59)
"AM 0:00" → The 12-hour display will appear. (AM 0:00 - PM 11:59)
"AM 12:00" → The 12-hour display will appear. (AM 12:00 - PM 11:59)

- Note that this can only be set when the unit is first installed or it has been reset (see page 29).

5 Press the MEMORY/SET button.

6 Press the TUNING/TIME (∨ or ∧) button to adjust the hour.

- Press the TUNING/TIME (∨ or ∧) button once to advance the time by 1 hour. Hold it down to advance continuously.
- When the 12-hour display is selected, "AM" will change automatically to "PM".

7 Press the MEMORY/SET button.

8 Press the TUNING/TIME (∨ or ∧) button to adjust the minutes.

- Press the TUNING/TIME (∨ or ∧) button once to advance the time by 1 minute. Hold it down to change the time in 5 minute intervals.
- The hour setting will not advance even if minutes advance from "59" to "00".

9 Press the MEMORY/SET button.

- The clock starts operating from "0" seconds. (Seconds are not displayed.)

To see the time display:

Press the CLOCK button.

- The time display will appear for about 5 seconds.

Note:

- The clock display will flash on and off at the push of the CLOCK button when the AC power supply is restored after a power failure occurs or after the AC power lead is disconnected. If this happens, follow the procedure below to change the clock time.

To change the clock time:

① Press the CLOCK button.

② Within 5 seconds, press the MEMORY/SET button.

③ Perform steps 6 - 9 above.

To change the time display mode:

① Perform steps 1 - 2 in the section "RESETTING THE MICROCOMPUTER", on page 29.

② Perform steps 1 - 9 above.

RESETTING THE MICROCOMPUTER

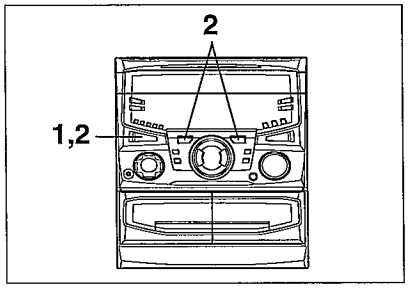

Reset the microcomputer under the following conditions:

- To erase all of the stored memory contents (clock and timer settings, and tuner and CD presets).
- If the display is not correct.
- If the operation is not correct.

1 Press the ON/STAND-BY button to enter the stand-by mode.

2 Whilst pressing down the ⏮/◀◀ button and the ▶▶/⏭ button, hold down the ON/STAND-BY button for at least 1 second.

Caution:

- The operation explained above will erase all data stored in memory including clock and timer settings, and tuner and CD presets.

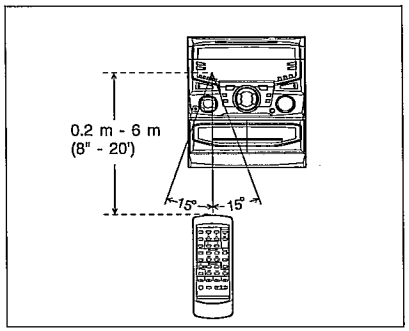

■ Remote control

Notes concerning use:

- Replace the batteries if the operating distance is reduced or if the operation becomes erratic.
- Periodically clean the transmitter LED on the remote control and the sensor on the main unit with a soft cloth.
- Exposing the sensor on the main unit to strong light may interfere with operation. Change the lighting or the direction of the unit.
- Keep the remote control away from moisture, excessive heat, shock, and vibrations.

DISASSEMBLY

Caution on Disassembly
Follow the below-mentioned notes when disassembling the unit and reassembling it, to keep it safe and ensure excellent performance:
1. Take cassette tape and compact disc out of the unit.
2. Be sure to remove the power supply plug from the wall outlet before starting to disassemble the unit.
3. Take off nylon bands or wire holders where they need to be removed when disassembling the unit. After servicing the unit, be sure to rearrange the leads where they were before disassembling.
4. Take sufficient care on static electricity of integrated circuits and other circuits when servicing.

CD-PC671H/651H

STEP	R EMOVAL	PROCEDURE	FIGURE
1	Top Cabinet	1. Screw ..... (A1) x4	8-1
2	Side Panel (Left/right)	1. Screw ..... (B1) x8	8-1
3	CD Player Unit/ CD Tray Cover	1. Turn on the power supply, open the disc tray, take out the CD cover, and close. (Note 1) 2. Hook ..... (C1) x3 3. Hook ..... (C2) x2 4. Socket ..... (C3) x3 5. Screw ..... (C4) x2	8-2
4	Back Board (with Tuner PWB/ Digital Output PWB)	1. Screw ..... (D1) x8 2. Socket ..... (D2) x2	8-2
5	Main PWB	1. Socket ..... (E1) x2 2. Flat Cable ..... (E2) x1 3. Flat Wire ..... (E3) x1 4. Tip Wire ..... (E4) x1	9-1
6	Power PWB	1. Screw ..... (F1) x4 2. Socket ..... (F2) x4 3. Holder PWB ..... (F3) x5	9-1
7	Front Panel	1. Screw ..... (G1) x2	9-1
8	Display PWB/ Switch PWB Headphones PWB	1. Screw ..... (H1) x13 2. Support Bracket ..... (H2) x1	9-2
9	Tape Mechanism	1. Open the cassette holder. 2. Screw..... (J1) x6 3. Socket ..... (J2) x1	9-2
10	Turntable	1. Screw ..... (K1) x1 2. Cover ..... (K2) x1	9-3
11	Disc Tray	1. Screw ..... (L1) x2 2. Guide ..... (L2) x2	9-3
12	CD Servo PWB (Note 2)	1. Screw ..... (M1) x1 2. Socket ..... (M2) x4	9-4
13	CD Changer Mechanism	1. Screw ..... (N1) x4	9-5
14	CD Mechanism	1. Screw ..... (P1) x1	9-5

Note 1:
How to open the changer manually. (Fig. 8-3)
1. Change, turn fully the lock lever in the arrow direction through the hole on the loading chassis bottom in this state. After that, push forward the CD player base.

Note 2:
1. After removing the connector for the optical pickup from the connector, wrap the conductive aluminium foil around the front end of connector to protect the optical pickup from electrostatic damage.

CD-PC671H/651H

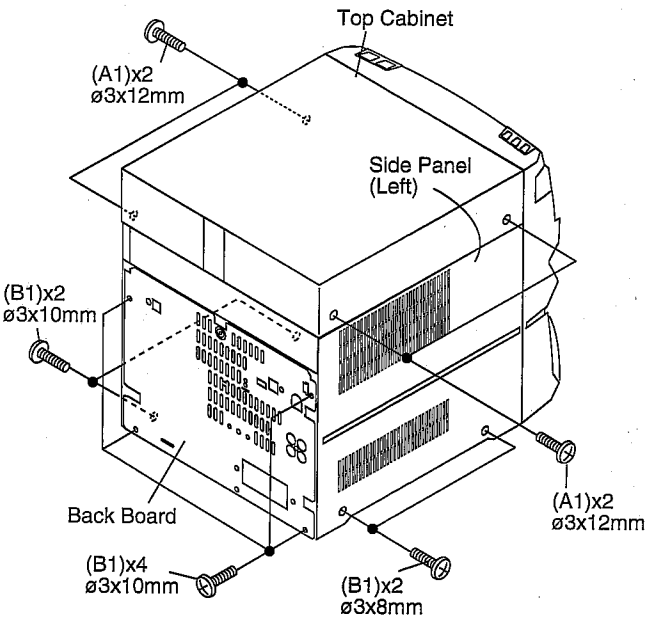

Figure 8-1

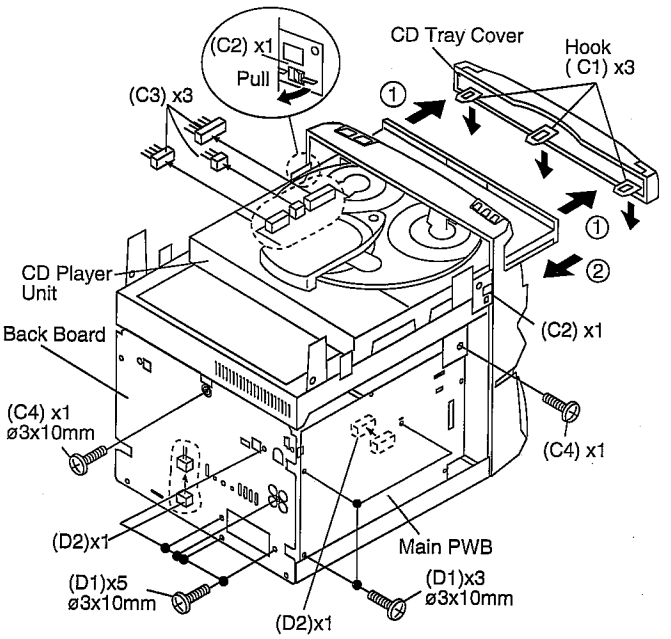

Figure 8-2

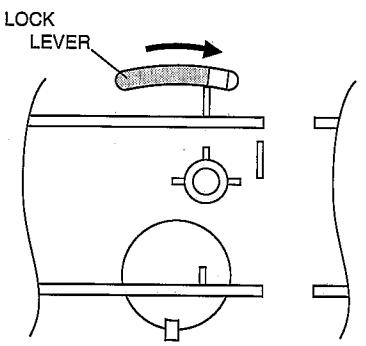

Figure 8-3

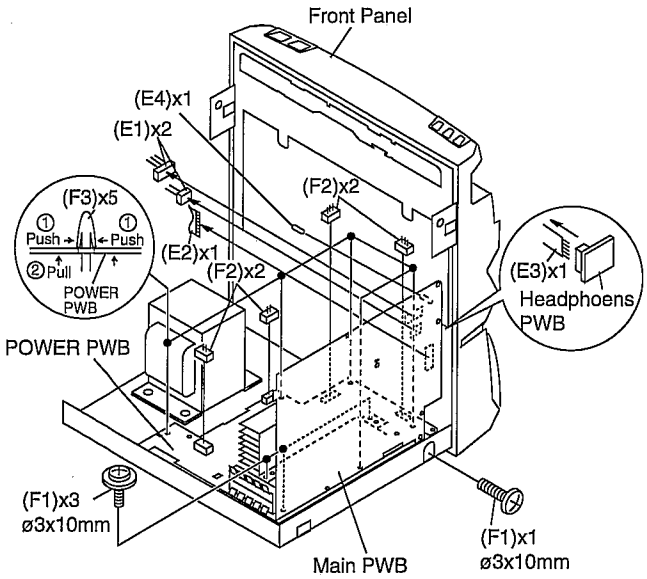

Figure 9-1

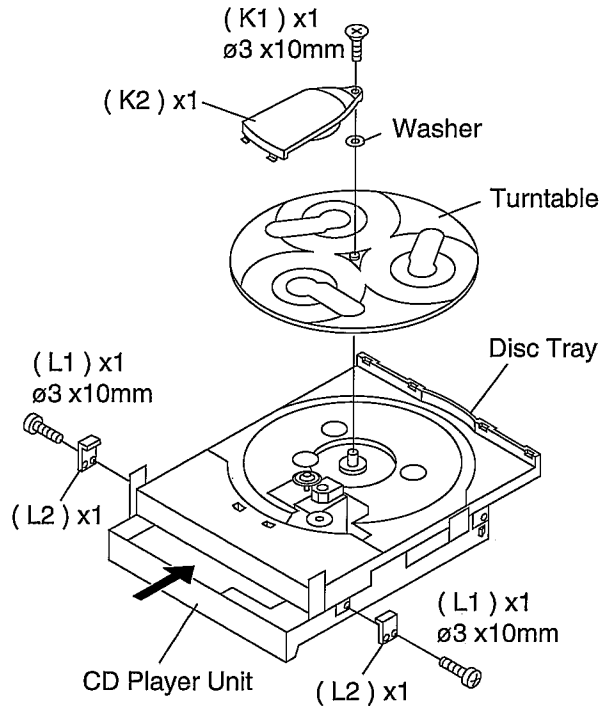

Figure 9-3

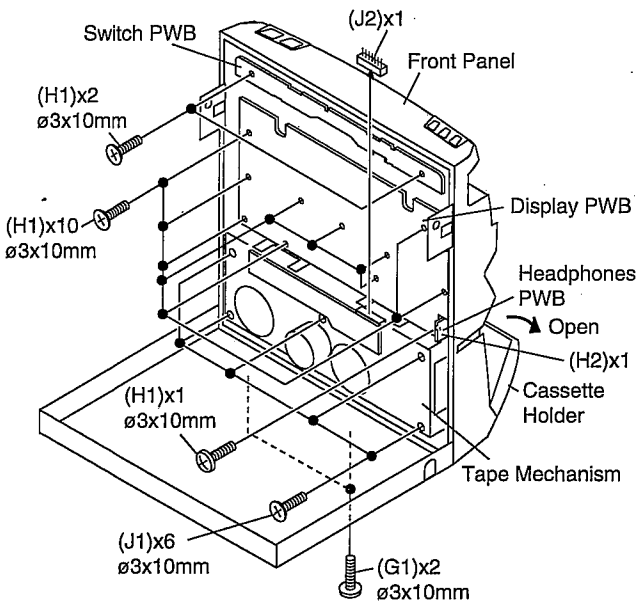

Figure 9-2

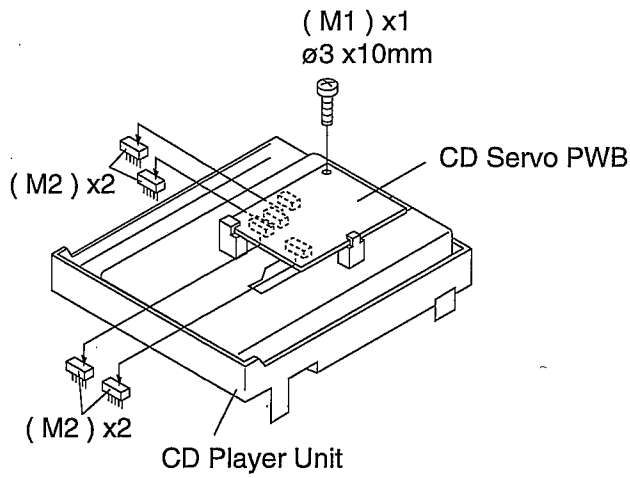

Figure 9-4

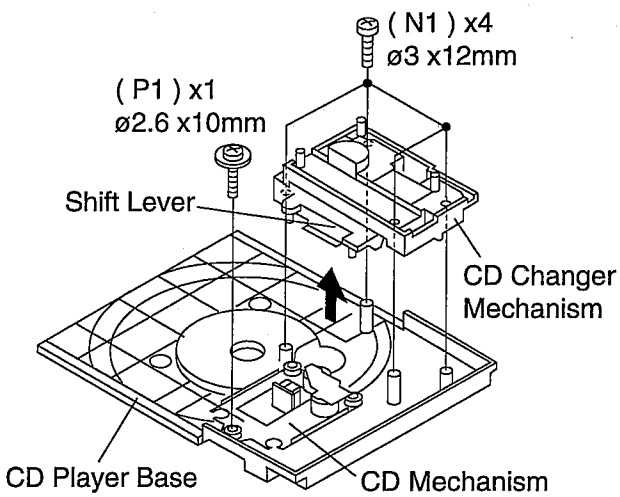

Be careful when installing the CD changer mechanism. Install the CD changer mechanism on the CD player base after the shift lever has been set in the highest position.

Figure 9-5

CP-C671H

STEP	REMOVAL	PROCEDURE	FIGURE
1	Front Speaker	1. Front Panel ..... (A2) x1 2. Tip ..... (A4) x2 3. Screw ..... (A3) x2 4. Screw ..... (A5) x2 5. Screw ..... (A5) x2	10-1

CP-C671H

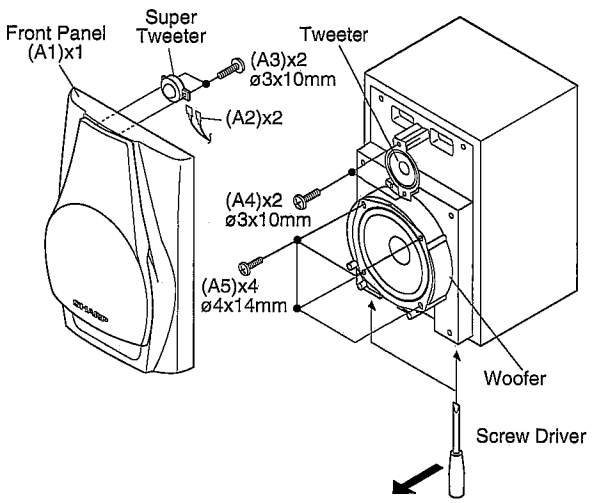

Figure 10-1

CP-C651H

STEP	REMOVAL	PROCEDURE	FIGURE
1	Front Speaker	1. Net..... (A1) x1 2. Front Panel ..... (A2) x1 3. Screw ..... (A3) x4 4. Tip ..... (A4) x2 5. Screw ..... (A5) x2 6. Tip ..... (A6) x2	10-1

CP-C651H

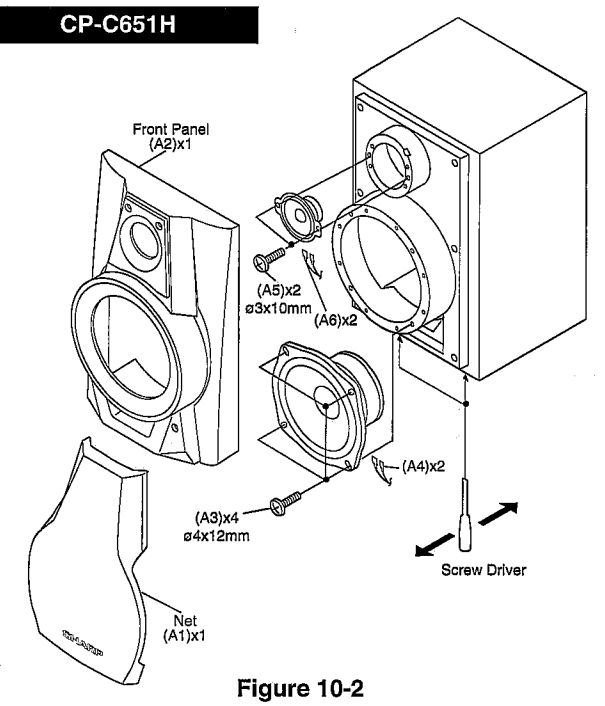

Figure 10-2

CP-SW671H **(CD-PC671H Only)**

STEP	REMOVAL	PROCEDURE	FIGURE
1	Sub woofer	1. Net..... (A1) x1 3. Screw ..... (A3) x4	10-2

CP-SW671H **(CD-PC671H Only)**

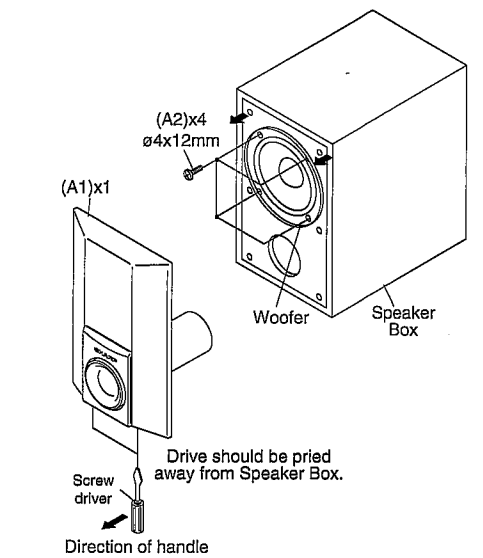

Figure 10-3

Note:
The rear speakers and center speaker can be easily disassembled.
Therefore the disassembling method is not described.
For details refer to the disassembling drawing in the Parts Guide.

REMOVING AND REINSTALLING THE MAIN PARTS

CD MECHANISM SECTION

Perform steps 1, 2, 3 and 10-14 of the disassembly method to remove the CD mechanism.

How to remove the loading motor (See Fig. 11-1)

1. Remove the screws (A1) x 2 pcs., to remove the loading motor.

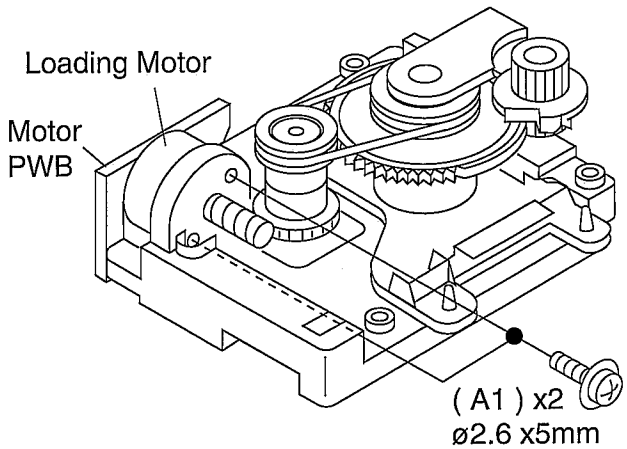

Figure 11-1

How to remove the pickup (See Fig. 11-2)

1. Remove the screws (B1) x 2 pcs., to remove the shaft (B2).
2. Remove the stop washer (B3) x 1 pc., to remove the gear (B4).
3. Remove the pickup.

Note

After removing the connector for the optical pickup from the connector, wrap the conductive aluminium foil around the front end of connector to protect the optical pickup from electrostatic damage.

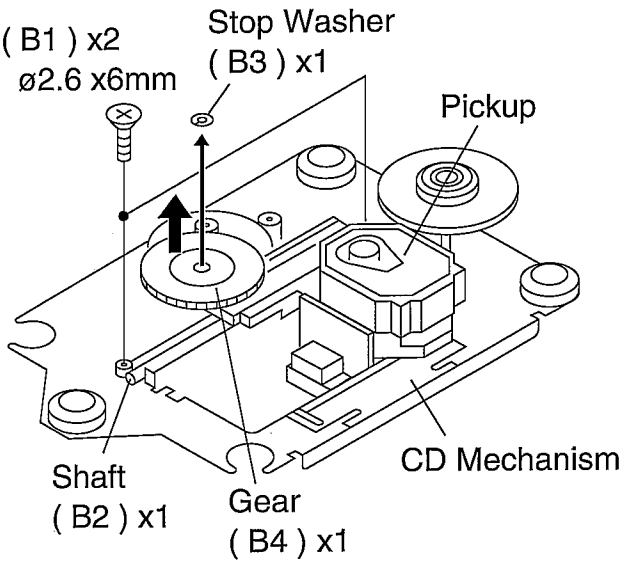

Figure 11-2

ADJUSTMENT

MECHANISM SECTION

• Driving Force Check

Torque Meter	Specified Value
Play: TW-2412	Tape 1: Over 80 g Tape 2: Over 80 g

• Torque Check

Torque Meter	Specified Value	
	Tape 1	Tape 2
Play: TW-2111	30 to 60 g. cm	30 to 60 g.cm
Fast forward: TW-2231	—	60 to 120 g.cm
Rewind: TW-2231	—	60 to 120 g.cm

• Tape Speed

	Test Tape	Adjusting Point	Specified Value	Instrument Connection
Normal speed	MTT-111	Variable Resistor in motor. (MM1)	3,000 ± 30 Hz	Speaker terminal (Load resistance: 8 ohms)

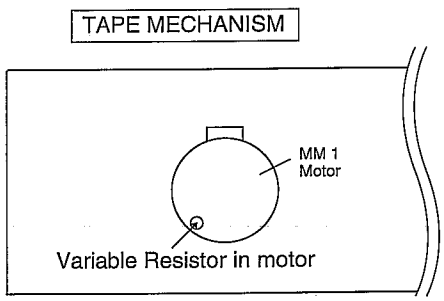

Figure 11-3

TUNER SECTION

fL: Low-range frequency
fH: High-renge frequency

- **AM IF/RF**

Signal generator: 400 Hz, 30%, AM modulated

Test Stage	Frequency	Frequency Display	Setting/ Adjusting Parts	Instrument Connection
IF	450 kHz	1,620 kHz	T351	*1
Band Coverage	—	522 kHz	(fL): T306 1.1 ± 0.1 V	*2
Tracking	990 kHz	990 kHz	(fH): T302	*1

*1. Input: Antenna, Output: TP302
*2. Input: Antenna, Output: TP301

- **FM**

Notes:

1: Description of the "FM IF Adjustment" is not carried on this Manual. It is because the IF coil in the FM front end section has been best adjusted in the factory so that its further adjustment is not needed at the field. When replacing the FM front end assembly, no adjustment is needed either.
2: The parts in the FM front end section are prepared in a complete unit, so you can't obtain each part individually

- **FM Mute Level**

Signal generator: 1 kHz, 40 kHz dev., FM modulated

Frequency	Frequency Display	Adjusting Parts	Instrument Connection
98.00 MHz (25 dBμV)	98.00 MHz	VR351	Input: Antenna Output: Speaker Terminal

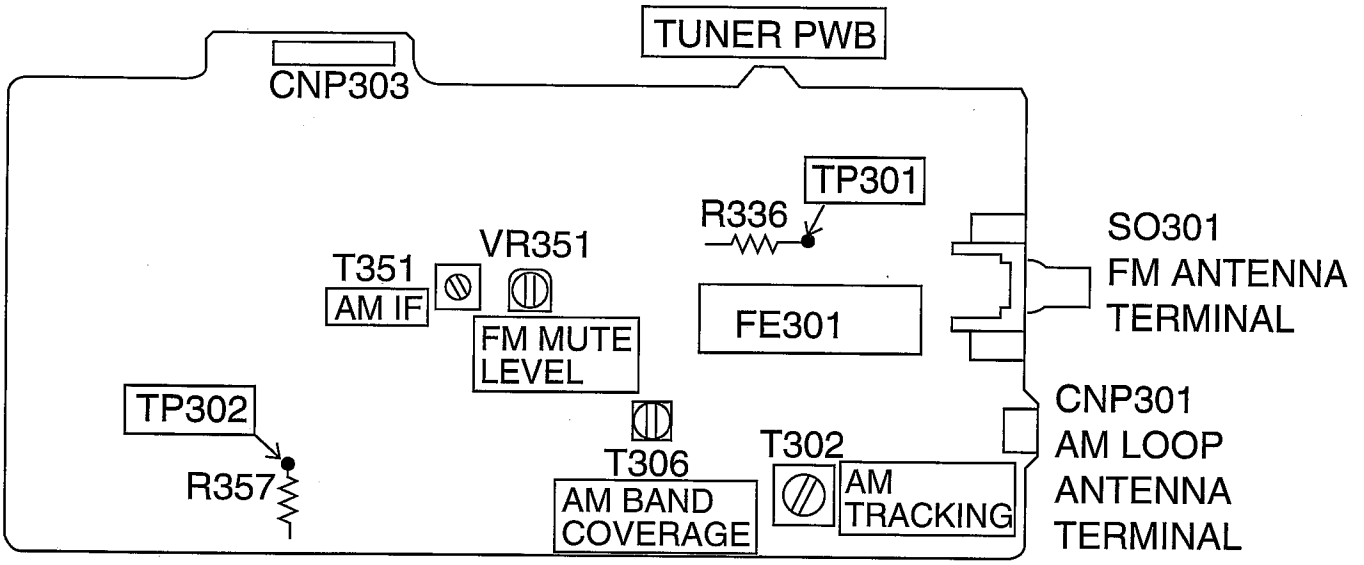

Figure 12 ADJUSTMENT POINTS

CD ERROR CODE DESCRIPTION

When a malfunction occurs during CD operation, an error code will be displayed to identify the function in CD operation which failed.

Error	State Code
0001	Cannot detect pickup-in SW
0101	Tray close operation error
0105	Tray close operation error
0201	Tray open operation error
0203	Tray open operation error
0304	Disc skip operation error
0305	Disc skip operation error
0307	Disc skip operation error

TEST MODE

• Setting the test mode

Any one of test mode can be set by pressing several keys as follows.

<CD> + < ▶▶ > + <POWER> TEST: CD operation test

• TEST mode

Function — CD test mode

Setting of TEST mode
Indication of CD TST mode (Fig. 13-1)
OPEN/CLOSE operation is manual operation.
The pickup can be moved by using the (▶▶) or (◀◀) key.
IL is not performed.

<MEMORY> LASER ON — <MEMORY> Tracking on the spot. SERVO OFF PLAY — <MEMORY> Tracking on the spot. SERVO ON PLAY — <STOP> STOP

<PLAY> key input — TOC. IL is performed, and the ordinary PLAY is performed. — Press <STOP> key. — Stop
If the following key is pressed during PLAY, it is possible to specify directly any Track No.
<Disc Number 1> key: Track 4
<Disc Number 2> key: Track 9
<Disc Number 3> key: Track 15

Note:

Only in STOP state it is possible to slide the pickup with the (▶▶) or (◀◀) key.

VOL. --- Last memory
BAL. --- CENTER
R.GEQ. --- FLAT
X-BAS --- OFF

Canceling method - POWER OFF

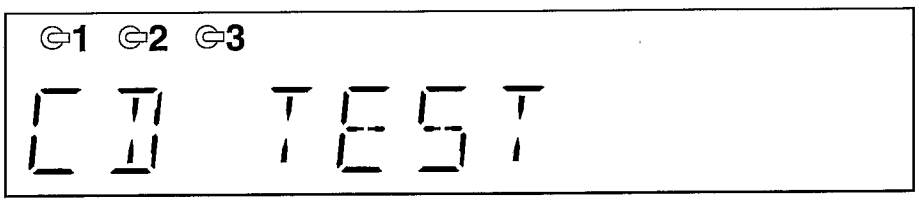

Figure 13-1

CD SECTION

Since this CD system incorporates the following automatic adjustment function, when the pickup is replaced, it is not necessary to readjust it.
Since this CD unit does not need adjustment, the combination of PWB and laser pickup unit is not restricted.

• Automatic adjustment item

1. Focus offset (Fig. 13-2)
2. Tracking offset (Fig. 13-3)
3. E/F balance (tracking error balance) (Fig. 13-4)
4. RF level AGC function (HF level: constant)
5. RF level automatic follow-up of the tracking gain

This automatic adjustment is performed each time a disc is changed. Therefore, each disc is played back using the optimal settings.

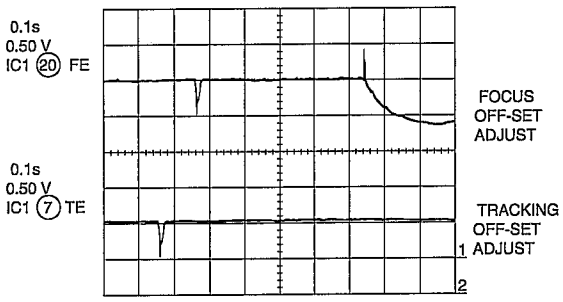

Figure 13-2

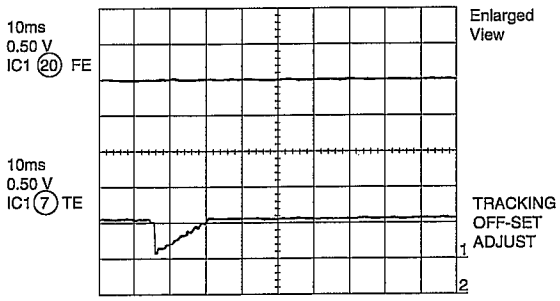

Figure 13-3

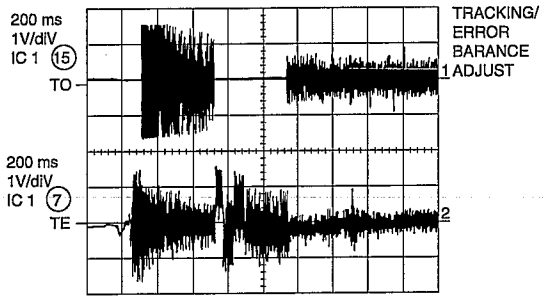

Figure 13-4

ASPM, summary operation

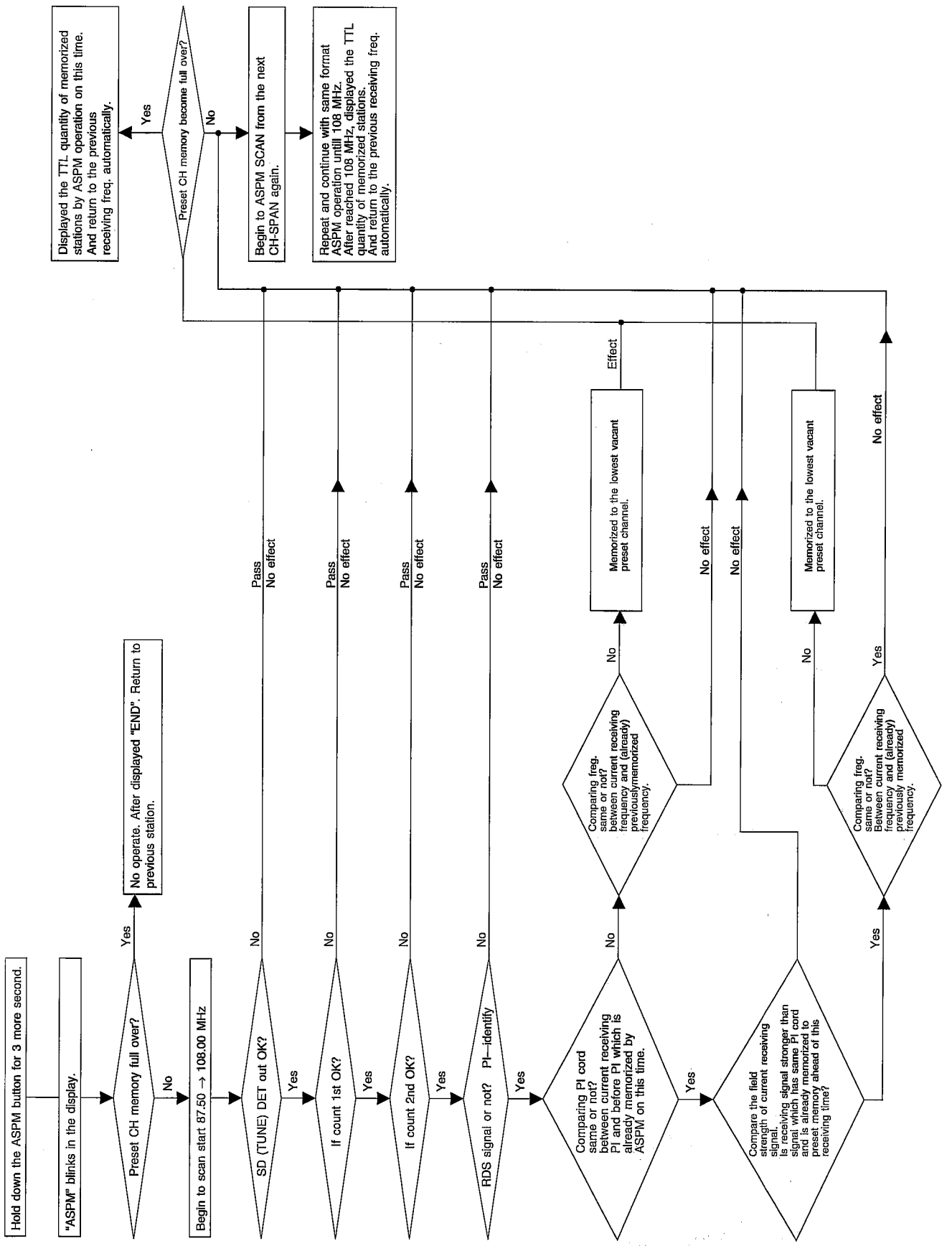

- ASPM SCAN: 87.50MHz → 108.00 MHz.
- Only RDS signal is memorized by ASPM because RDS signal has PI code and is suitable and convenient for ASPM operation.

ASPM

Comparing field strength, only one strongest RDS station is memorized of all stations (repeater relay stations) that have same PI code.

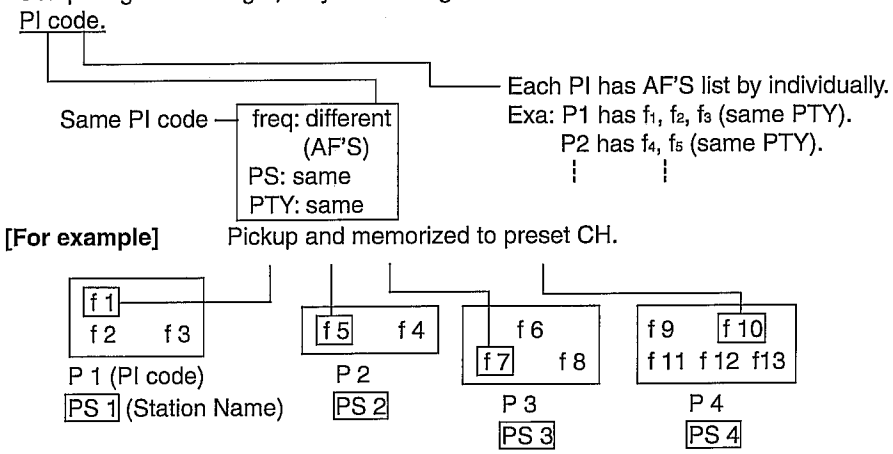

Select signals (f1, f5, f7, f10) are memorized in the preset memory by ASPM.

- If tentative - ASPM operation is repeated intentionally, never memorized (over write) at the same frequecy.

1st time ASPM → strongest stations of each PI are memorized.

ASPM is not only very usefull for PTY search, but also EON operation.
2nd time ASPM → 2nd strong stations of each PI are memorized and so on.
PTY search function is equal to FM band search function as a result.

1. Introduction of RDS for CD-PC671H/651H

CD-C661H/661HR RDS function is equal to adding EON feature to the current CD-C75H RDS.
EON feature is EON—PTY and EON—TI.
Although PTY and TI indicators are separated, PTY contains TI in the PTY items (software) like current PTY search items.

NEWS, AFFAIRS, INFO, ALARM, TI (TTL 17 kinds)

↑ EON—PTY — Can select and stand-by

↑ EON—TI — Can select and stand-by

EON—PTY and EON—TI are basically stand-by → receive the desired program of ON station.

2. The difference point from current CD-C75H RDS. (CD-C75H — CD-PC671H/651H)

1. PTY item: added TA. (TTL 18 kind.)
2. Each "TP", "TA" ind. light up or go out individually.
   "TA" ind. doesn't light up on current model, CD-C75H due to none EON—TI.
3. Added 3 indicators(in FL) due to adding EON feature.
   EON: Lights up only during receiving EON data (14A).
   TI: During EON-TI stand-by → Light up
   During receiving ON station. → blink.
   PTY: During EON-PTY stand-by → Light up
   During receiving ON station. → blink.
4. No adjust type (None adjusting circuit.)
5. Added EON button.
6. Need to change RDS logo due to the addition of EON feature.
7. Added EON—TI, EON—PTY function.

3. Summary of CD-PC671H/651H RDS—EON operation

EON—PTY: Select and set the desired "PTY" → stand-by → switch to ON (other network) Station at the start of desired PTY automatically → stay and listen to PTY of ON station → switch back to TN (This net) station automatically at the end of PTY (ON) i.e. after changing to another PTY (except AFFAIRS) or cancelling to receive PTY of ON station midway.

EON—TI: Select and set the "TI" → stand-by → switch to ON station at the start of traffic announcement automatically → stay and listen to TA of ON station → switch back to TN station automatically at the end of TA (ON).
ie after TA (ON) is over or cancelled to receive TA of ON station midway.
When switching TN → ON station.

In case of exist 2 more stations having the desired (specified) "PTY" or "TI", the receiver will select and switch to ON station comparing field strength at the same time. But when the frequency of ON station exists in the preset-memory, then receiver switches straight to that ON station (CH), without comparing field strength so can make a quick switching from TN—ON station.
Preset memory takes priority of switching TN—ON station.
Therefore ASPM is usefull not only for PTY search but also for rapid EON switching.
Anyway CD-C661H/661HR EON is basically stand-by and receiving method, along with the Guidelines for EON implementation.

RDS (Radio Data System) OPERATION

RDS is a broadcasting service which a growing number of FM stations are now providing. It allows these FM stations to send additional signals along with their regular programme signals. For example, the stations send their station names, and information about what type of programme they broadcast, such as sports or music, etc.
When tuned to an FM station which provide the RDS service, the RDS will appear, the station frequency (and then the station name if sent) is displayed.
The TP (Traffic Programme) will appear on the display when the received broadcast carries traffic announcements, and the TA (Traffic Announcement) will appear whilst a traffic announcement is being received.
EON will appear whilst the EON (Enhanced Other Networks information) data is being broadcast.
The PTYI (Dynamic PTY Indicator) will appear whilst the Dynamic PTY station is being received.

Note:
When the TP and TA appear at the same time, an announcement is being made.
When only the TA appears, an announcement is not being made. (See page 24.)

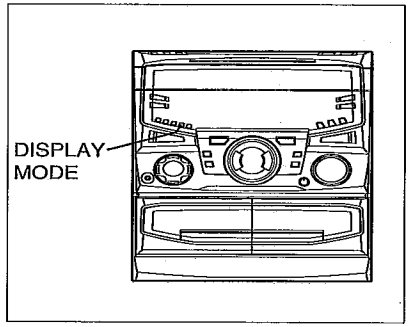

■ Information Provided by RDS

With the CD-PC671H, you can display three types of RDS service. To show them in the display, press the DISPLAY MODE button.
Each time you press the DISPLAY MODE button, the display will change to show the following information.

PS (Programme Service):	Station names commonly known will be displayed. "NO PS" appears if no signal is being received.
PTY (Programme Type):	Programme type will be displayed. "NO PTY" appears if no signal is being received.
RT (Radio Text):	Radio text will be displayed. "NO RT" appears if no signal is being received.
Station Frequency:	Station frequencies.

(Continued)

Descriptions of the PTY (Programme Type) codes, TP (Traffic Programme) and TA (Traffic Announcement)
With the CD-PC671H, you can search for and receive the following PTY, TP and TA signals.

NEWS:	Short accounts of facts, events and publicly expressed views, reportage and actuality.
AFFAIRS:	Topical programme expanding or enlarging upon the news, generally in different presentation style or concept, including debate, or analysis.
INFO:	Programmes whose purpose is to impart advice in the widest sense.
SPORT:	Programme concerned with any aspect of sport.
EDUCATE:	Programme intended primarily to educate, of which the formal element is fundamental.
DRAMA:	All radio plays and serials.
CULTURE:	Programmes concerned with any aspect of national or regional culture, including language, theatre, etc.
SCIENCE:	Programmes about the natural sciences and technology.
VARIED:	Used for mainly speech-based programmes usually of light-entertainment nature, not covered by other categories. Examples include: quizzes. panel games, personality interviews.
POP M:	Commercial music, which would generally be considered to be of current popular appeal, often featuring in current or recent record sales charts.
ROCK M:	Contemporary modern music, usually written and performed by young musicians.
EASY M:	Current contemporary music considered to be "easy-listening", as opposed to Pop, Rock or Classical, or one of the specialized music styles, Jazz, Folk or Country. Music in this category is often but not always, vocal, and usually of short duration.
LIGHT M:	Classical Musical for general, rather than specialist appreciation. Examples of music in this category are instrumental music, and vocal or choral works.
CLASSICS:	Performances of major orchestral works, symphonies, chamber music etc., and including Grand Opera.
OTHER M:	Musical styles not fitting into any of the other categories. Particularly used for specialist music of which Rhythm & Blues and Reggae are examples.
WEATHER:	Weather reports and forecasts and Meteorological information.
FINANCE:	Stock Market reports, commerce, trading etc.
CHILDREN:	For programmes targeted at a young audience, primarily for entertainment and interest, rather than where the objective is to educate.
SOCIAL:	Programmes about people and things that influence them individually or in groups. Includes: sociology, history, geography, psychology and society.
RELIGION:	Any aspect of beliefs and faiths, involving a God or Gods, the nature of existence and ethics.
PHONE IN:	Involving members of the public expressing their views either by phone or at a public forum.
TRAVEL:	Features and programmes concerned with travel to near and far destinations, package tours and travel ideas and opportunities. Not for use for Announcements about problems, delays, or roadworks affecting immediate travel where TP/TA should be used.
LEISURE:	Programmes concerned with recreational activities in which the listener might participate. Examples include, Gardening, Fishing. Antique collecting, Cooking, Food & Wine etc.
JAZZ:	Polyphonic, syncopated music characterised by improvisation.
COUNTRY:	Songs which originate from, or continue the musical tradition of the American Southern States. Characterised by a straightforward melody and narrative story line.
NATION M:	Current Popular Music of the Nation or Region in that country's language, as opposed to International `Pop' which is usually US or UK inspired and in English.
OLDIES:	Music from the so-called "golden age" of popular music.
FOLK M:	Music which has its roots in the musical culture of a particular nation, usually played on acoustic instruments. The narrative or story may be based on historical events or people.
DOCUMENT:	Programme concerned with factual matters, presented in an investigative style.
TEST:	Broadcast when testing emergency broadcast equipment or receivers.
ALARM !:	Emergency announcement made under exceptional circumstances to give warning of events causing danger of a general nature.
NONE:	No programme type (receive only).
TP:	Broadcasts which carry traffic announcements.
TA:	Traffic announcements are being broadcast at present.

Note:
- When the unit is in the EON stand-by mode and a programme is selected, the unit will display "TI" instead of "TA".

EXPLANATION OF DOLBY SURROUND PRO LOGIC AND EVALUATION METHOD

Outline

- Namely, two speakers are connected in parallel to one amplifier.
- In the Pro Logic BYPASS mode the amplifier for C-ch (center channel) and the amplifier for S-ch (surround channel) are in MUTE state. The SP output is cut.
- In the normal mode of Pro Logic ON mode the amplifiers for C-ch and S-ch are in operative state, so that the SP output appears.
- In the Phantom mode of Pro Logic ON mode the amplifier for C-ch is in MUTE state, so that the SP output is cut. The amplifier for S-ch (surround) is in operative state, so that the SP output appears

• State of element output and terminal output in specific mode

State of set / Output point		Dolby Pro Logic Bypass mode	Dolby Pro Logic On mode	
			Normal mode	Phantom mode
IC501	12 pin L-out	Output enabled state	Output enabled state	Output enabled state
	11 pin R-out	Output enabled state	Output enabled state	Output enabled state
IC501	9pin C-out	No output	Output enabled state	No output
IC501	10pin S-out	No output	Output enabled state	Output enabled state
SP OUT (SO901)	L-ch	Output enabled state	Output enabled state	Output enabled state
	R-ch	Output enabled state	Output enabled state	Output enabled state
SP OUT C-ch (SO901)		No output in MUTE (Q404) state	Output enabled state	No output in MUTE (Q404) state
SP OUT S-ch (SO901)		No output in MUTE (Q403) state	Output enabled state	Output enabled state

Test tone output

- Pro Logic ON Normal mode

  Press the remote control TEST TONE button.

  →Output of only L-ch →Output of only C-ch
  ↑ ↓
  Output of only S-ch ← Output of only R-ch

  The test tone (noise) is repeatedly output for output period (2 sec).

  In this case the following indication appears repeatedly.

  →TEST →L-ch →C-ch
  ↑ ↓
  S-ch ← R-ch

- Pro Logic ON Phantom mode

  Press the remote control TEST TONE button.

  →Output of only L-ch →Output of only R-ch
  ↑ ↓
  ← Output of only S-ch

  The test tone (noise) is repeatedly output for output period (2 sec).

  In this case the following indication appears repeatedly.

  →TEST → L-ch → R-ch
  ↑ ↓
  ← S-ch←

Relation between VIDEO IN input and output in Pro Logic ON state

(1) L-ch/R-ch same phase input into VIDEO IN input jack in VIDEO Function mode

Output point		Normal mode
SP out (SO901)	L-ch	Almost no output (only omitting component)
	R-ch	Almost no output (only omitting component)
(SO901) SP out C-ch		Input signal is output.
(SO901) SP out S-ch		Almost no output (only omitting component)

Output point		Phantom mode
SP out (SO901)	L-ch	Input signal is output.
	R-ch	Input signal is output.
(SO901) SP out C-ch		SP cut, no output
(SO901) SP out S-ch		Almost no output (only omitting component)

(2) L-ch/R-ch reverse phase input into VIDEO IN input jack in VIDEO Function mode

(Reverse phase: Phase difference between L and R is 180°)

Output point		Normal mode
SP out (SO901)	L-ch	Almost no output (only omitting component)
	R-ch	Almost no output (only omitting component)
(SO901) SP out C-ch		Almost no output (only omitting component)
(SO901) SP out S-ch		Input signal is output.

Output point		Phantom mode
SP out (SO901)	L-ch	Almost no output (only omitting component)
	R-ch	Almost no output (only omitting component)
(SO901) SP out C-ch		SP cut, no output
(SO901) SP out S-ch		Input signal is output.

- Accordingly, if you want to output signal waveform to C-ch SP out, give the same phase input into L-ch/R-ch INPUT in the Pro Logic Normal mode.

  If one of channels receives input, C-ch does not output. Only L-ch or R-ch outputs.

- If you want to output signal waveform to S-ch SP out, you can use either Normal mode or Phantom mode. However, 180° reverse phase input must be given to L-ch/R-ch INPUT.

NOTES ON SCHEMATIC DIAGRAM

- Resistor:
  To differentiate the units of resistors, such symbol as K and M are used: the symbol K means 1000 ohm and the symbol M means 1000 kohm and the resistor without any symbol is ohm-type resistor. Besides, the one with "Fusible" is a fuse type.
- Capacitor:
  To indicate the unit of capacitor, a symbol P is used: this symbol P means micro-micro-farad and the unit of the capacitor without such a symbol is microfarad. As to electrolytic capacitor, the expression "capacitance/withstand voltage" is used.
  (CH), (TH), (RH), (UJ): Temperature compensation
  (ML): Mylar type
  (P.P.): Polypropylene type
- Schematic diagram and Wiring Side of P.W.Board for this model are subject to change for improvement without prior notice.
- The indicated voltage in each section is the one measured by Digital Multimeter between such a section and the chassis with no signal given.
  1. In the tuner section,
     ( ) indicates AM
     < > indicates FM stereo
  2. In the main section, a tape is being played back.
  3. In the deck section, a tape is being played back.
     ( ) indicates the record state.
  4. In the power section, a tape is being played back.
  5. In the CD section, the CD is stopped.
- Parts marked with "⚠" (⊏⊐) are important for maintaining the safety of the set. Be sure to replace these parts with specified ones for maintaining the safety and performance of the set.

REF. NO	DESCRIPTION	POSITION
SW1	OPEN/CLOSE	ON—OFF
SW2	MECHA UP	ON—OFF
SW3	DISC NUMBER	ON—OFF
SW4	PICKUP IN	ON—OFF
SW701	ON/STAND-BY	ON—OFF
SW702	STATION	ON—OFF
SW703	CLOCK	ON—OFF
SW704	TIMER/SLEEP	ON—OFF
SW705	DISC 1	ON—OFF
SW706	DISC 2	ON—OFF
SW707	DISC 3	ON—OFF
SW708	DISC SKIP	ON—OFF
SW709	OPEN/CLOSE	ON—OFF
SW710	REW	ON—OFF
SW711	REC PAUSE	ON—OFF
SW712	MEMORY/SET	ON—OFF
SW713	STOP	ON—OFF
SW714	TUNER/BAND	ON—OFF
SW715	VIDEO	ON—OFF
SW716	TAPE	ON—OFF
SW717	CD	ON—OFF

REF. NO	DESCRIPTION	POSITION
SW718	PTY/TI SEARCH	ON—OFF
SW719	EON	ON—OFF
SW720	ASPM	ON—OFF
SW721	DISPLAY/MODE	ON—OFF
SW722	FF	ON—OFF
SW723	TUNING UP	ON—OFF
SW724	TUNING DOWN	ON—OFF
SW725	PLAY	ON—OFF
SW726	VOLUME DOWN (PC651H ONLY)	ON—OFF
SW727	VOLUME UP (PC651H ONLY)	ON—OFF
SW728	X-BASS/DEMO	ON—OFF
SW729	EQUALIZER	ON—OFF
SW730	DIMMER	ON—OFF
SW731	PHANTON	ON—OFF
SW732	NORMAL	ON—OFF
SW733	BYPASS	ON—OFF
SWM 3	FOOL PROOF	ON—OFF
SWM 4	F.A.S.	ON—OFF
SWM 5	CAM	ON—OFF
VR702	VOLUME GOG	ON—OFF

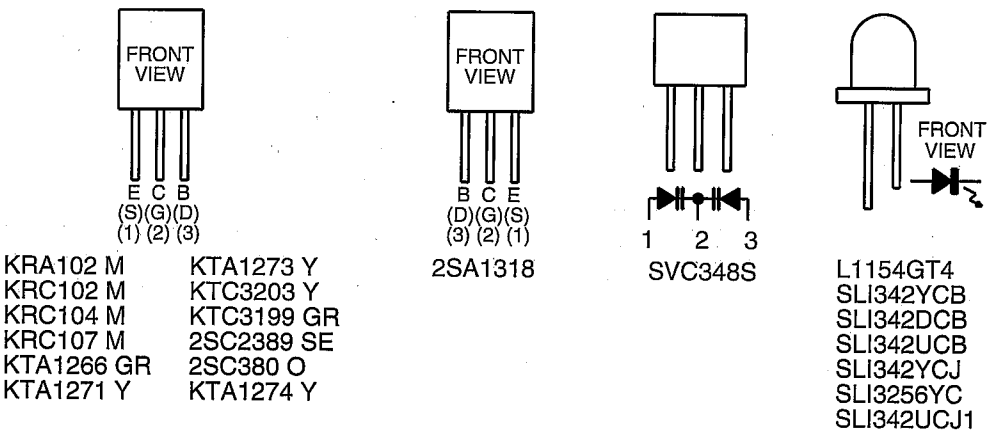

Figure 18 TYPES OF TRANSISTOR AND LED

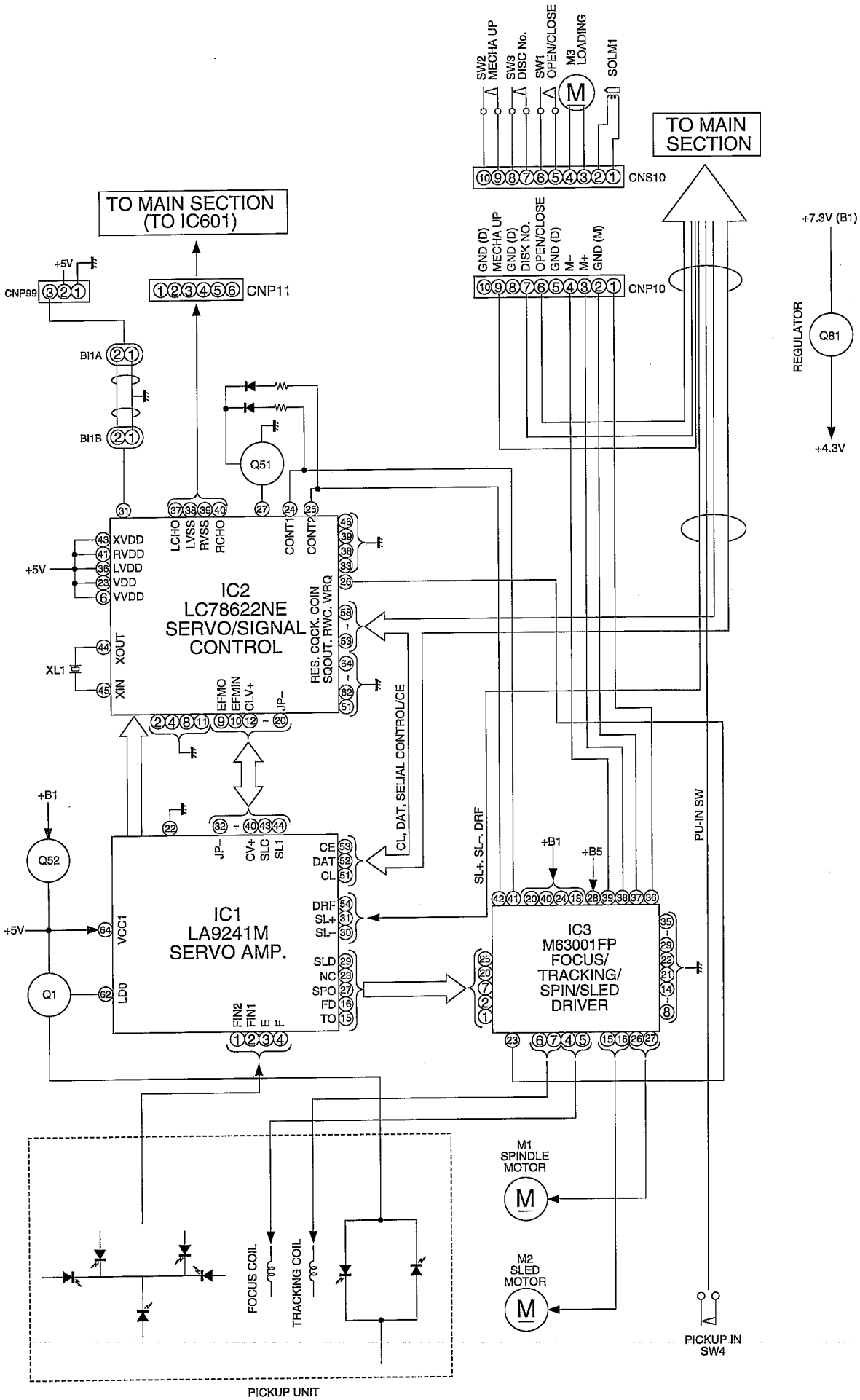

Figure 19 BLOCK DIAGRAM (1/3)

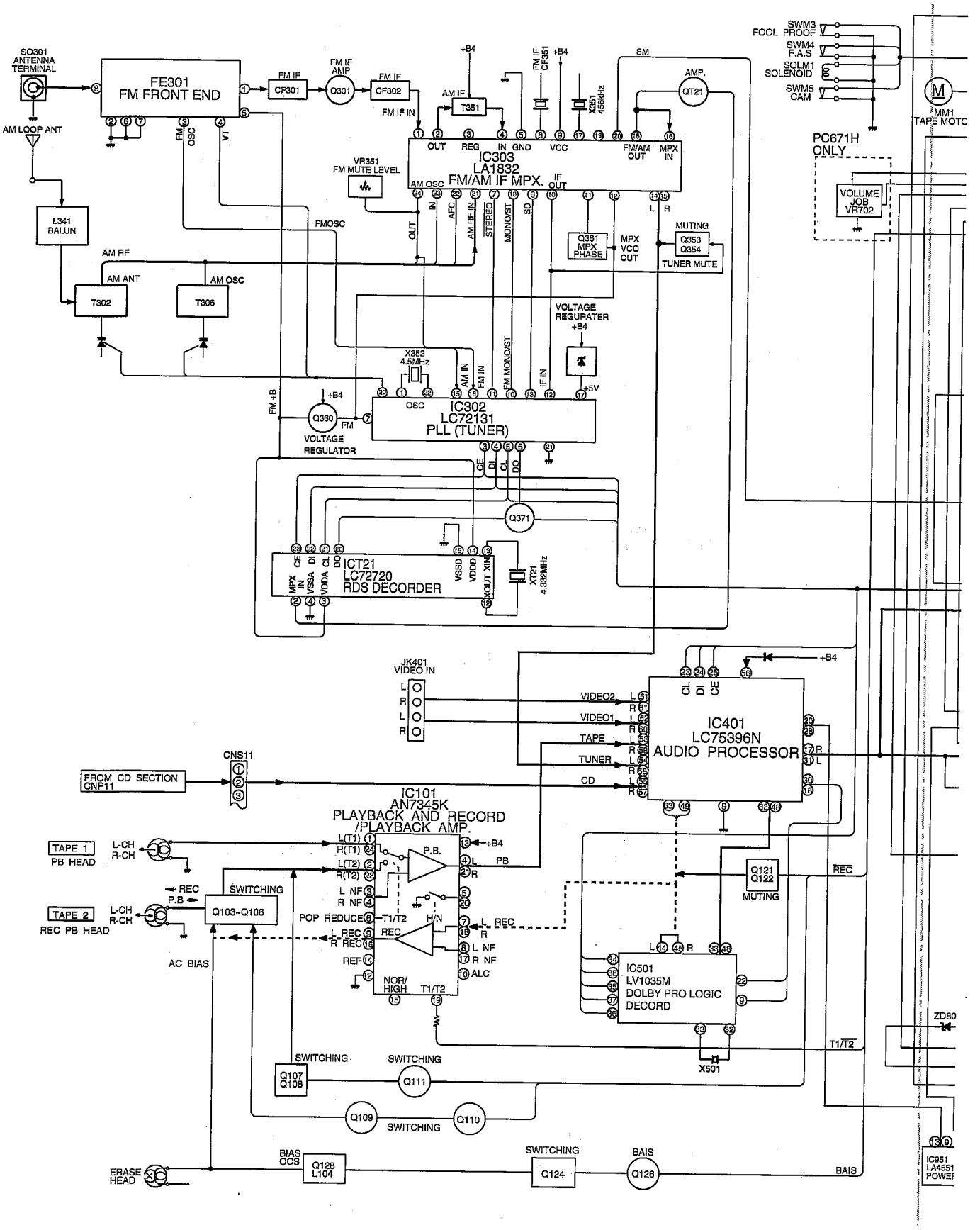

Figure 20 BLOCK DIAGRAM (2/3)

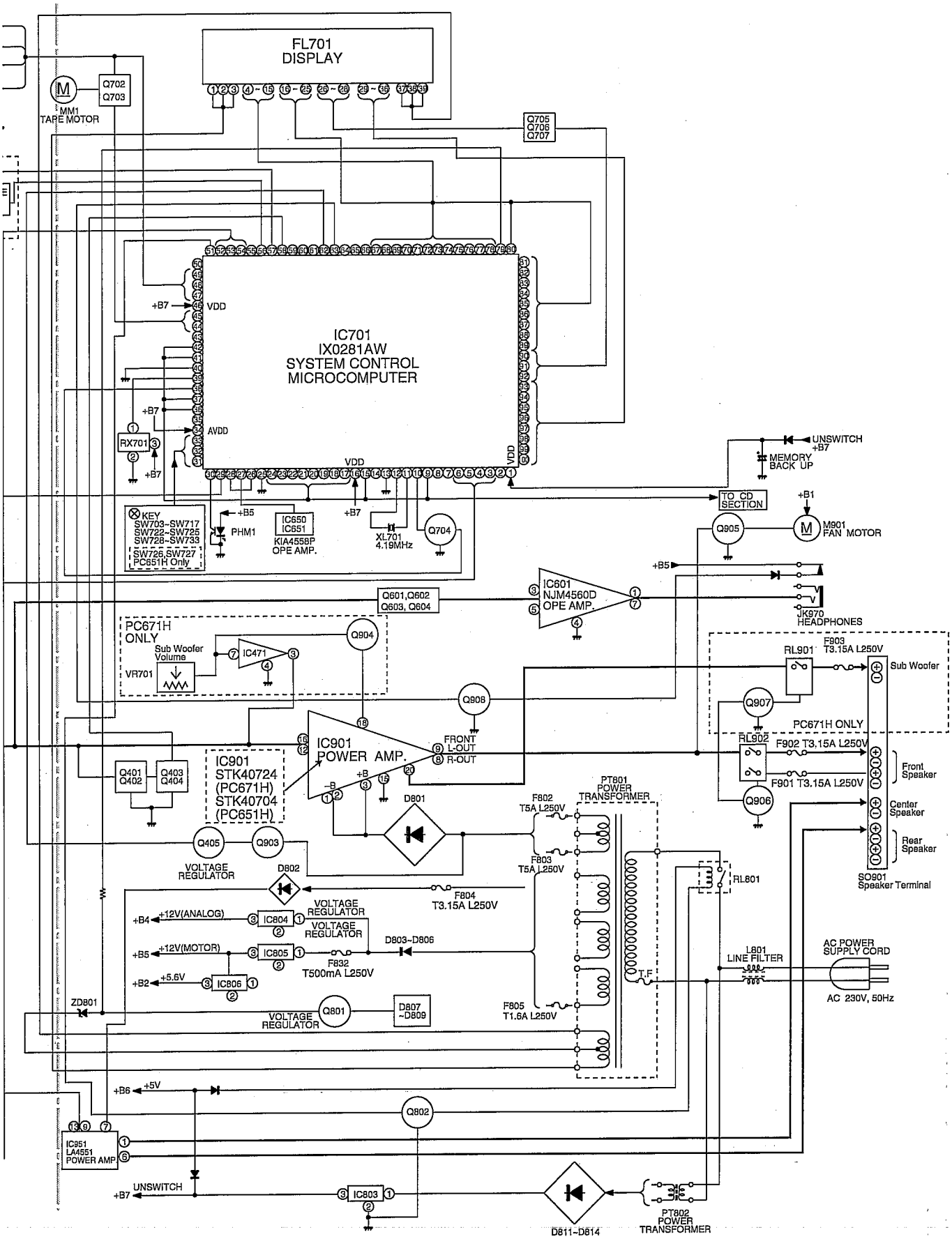

Figure 21 BLOCK DIAGRAM (3/3)

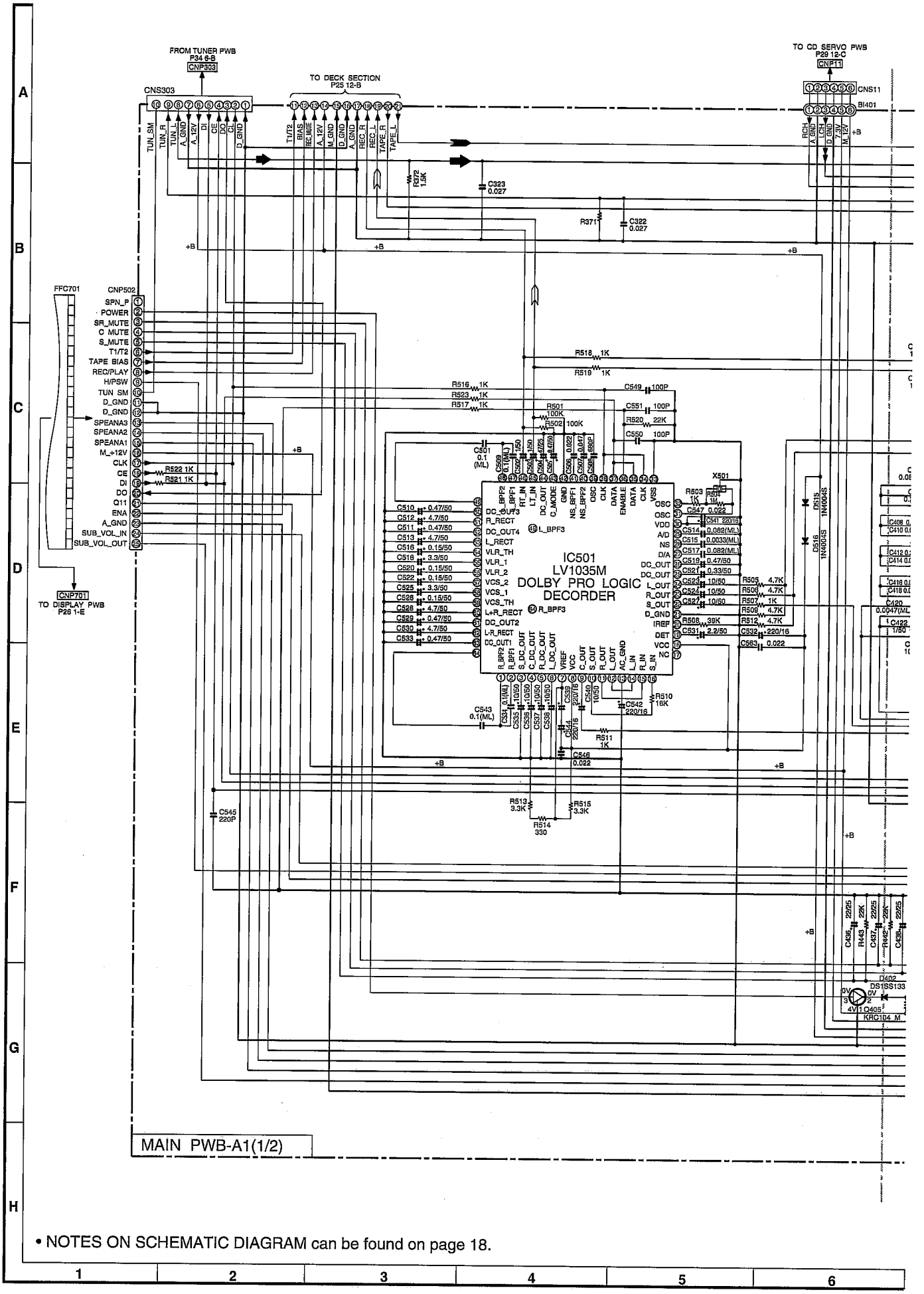

• NOTES ON SCHEMATIC DIAGRAM can be found on page 18.

Figure 22 SCHEMATIC DIAGRAM (1/13)

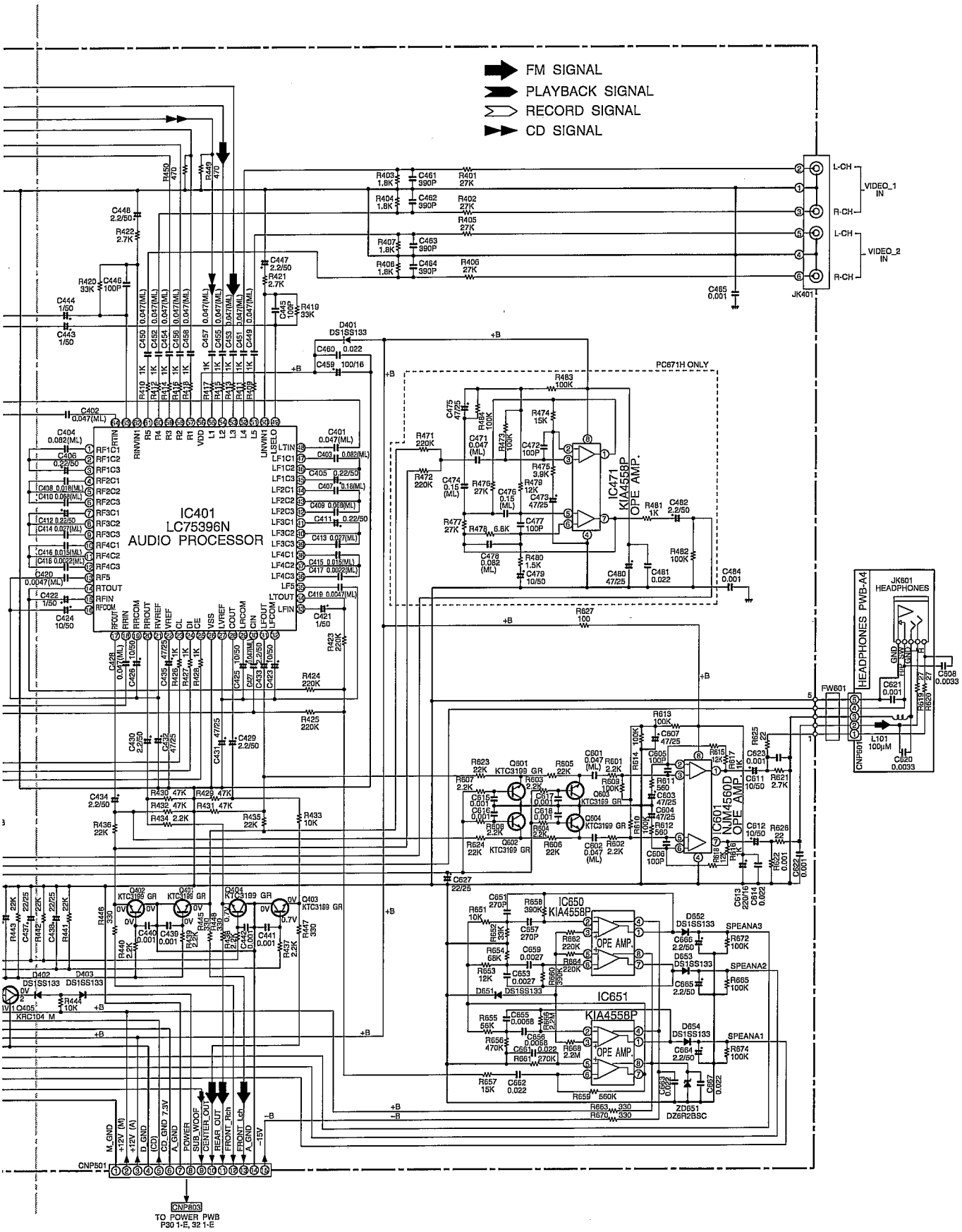

Figure 23 SCHEMATIC DIAGRAM (2/13)

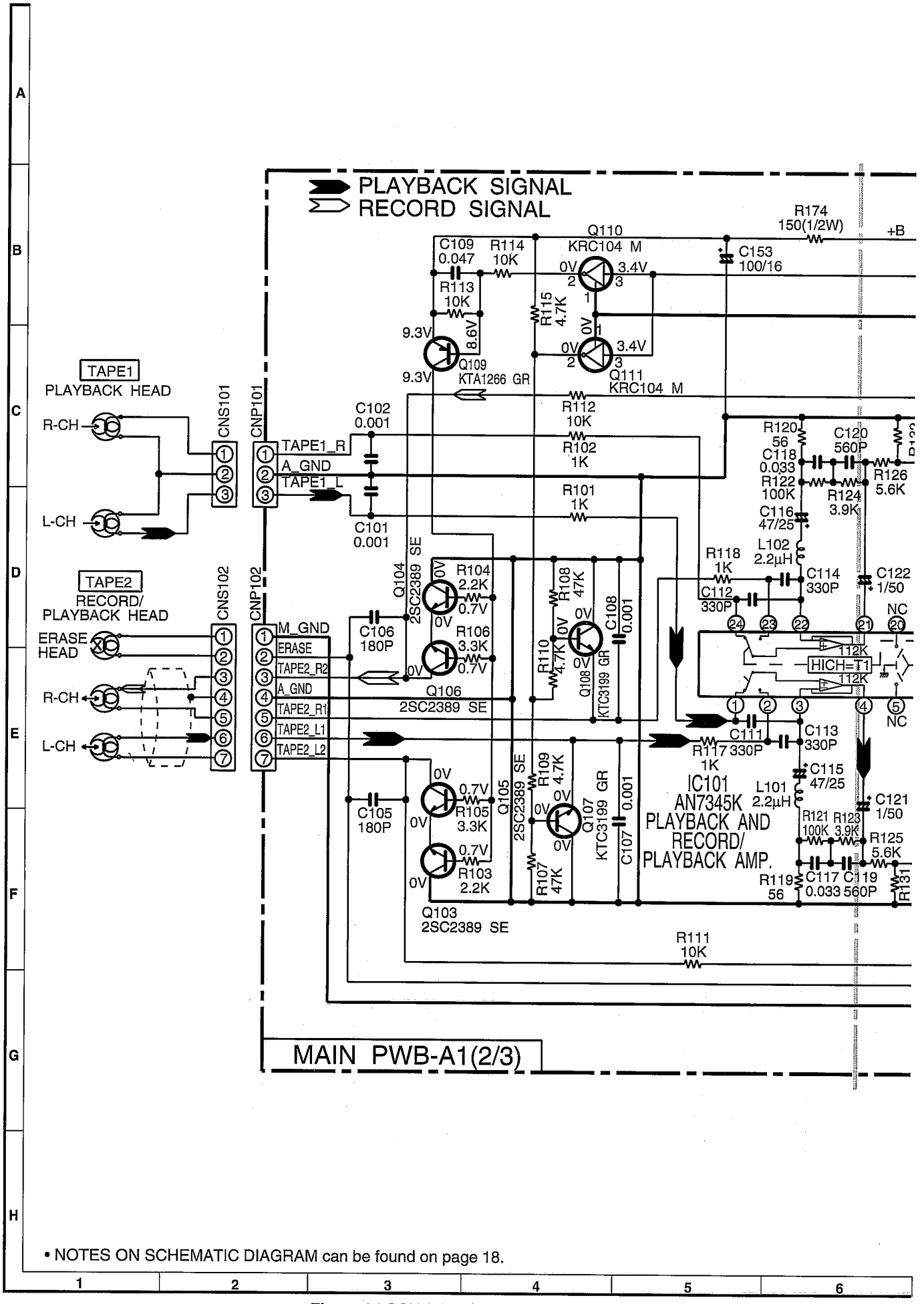

• NOTES ON SCHEMATIC DIAGRAM can be found on page 18.

Figure 24 SCHEMATIC DIAGRAM (3/13)

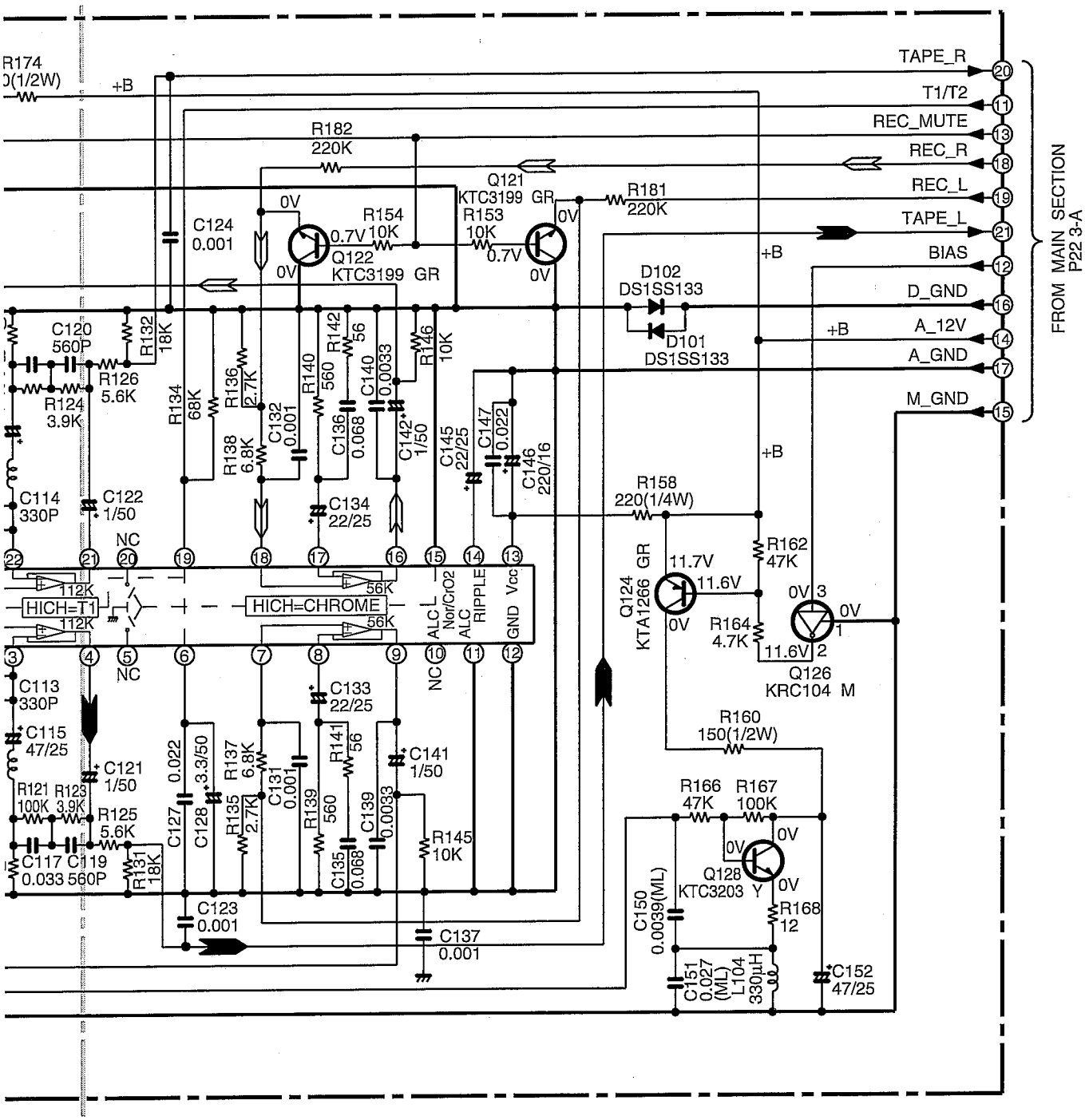

7	8	9	10	11	12

Figure 25 SCHEMATIC DIAGRAM (4/13)

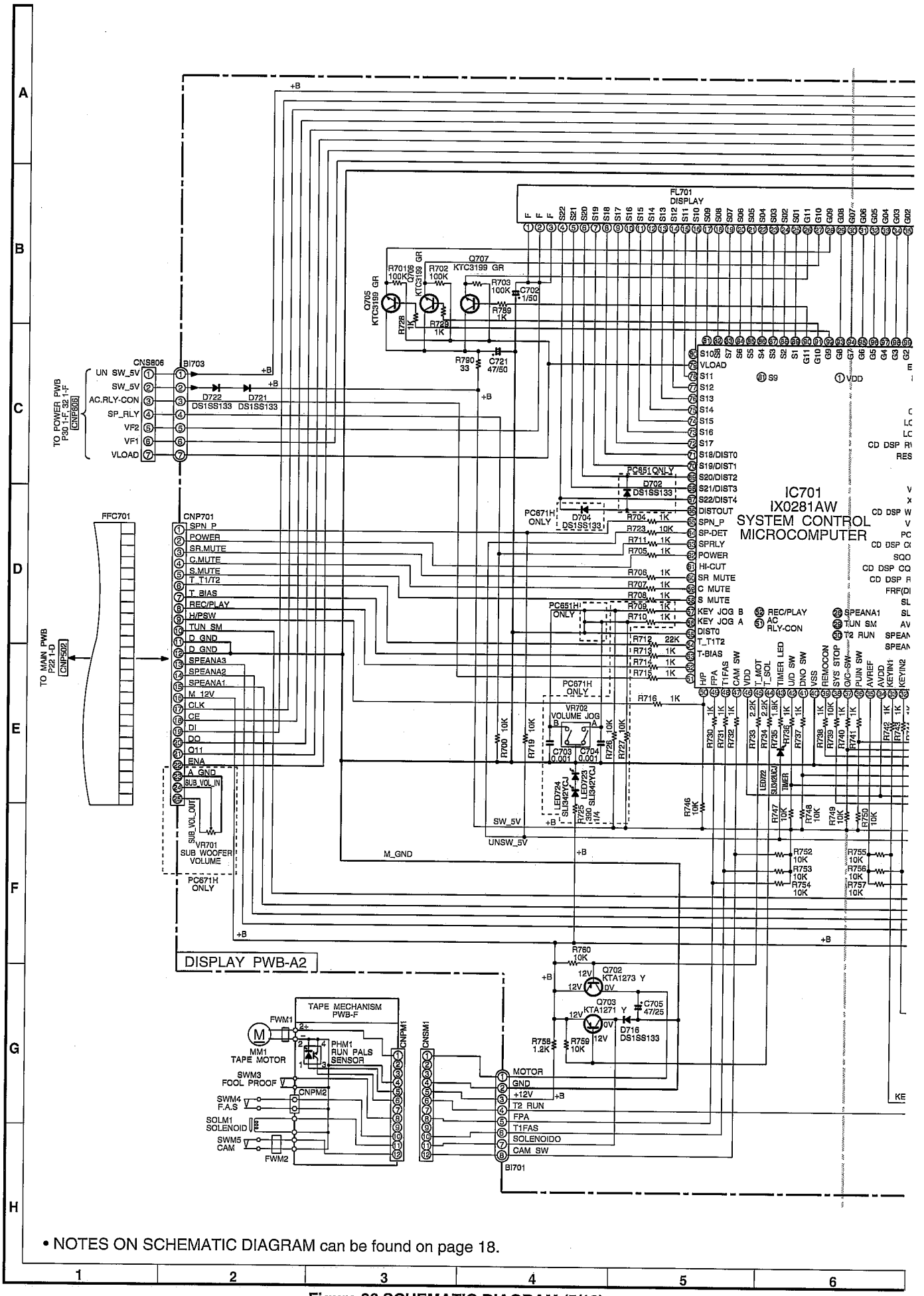

• NOTES ON SCHEMATIC DIAGRAM can be found on page 18.

Figure 26 SCHEMATIC DIAGRAM (5/13)

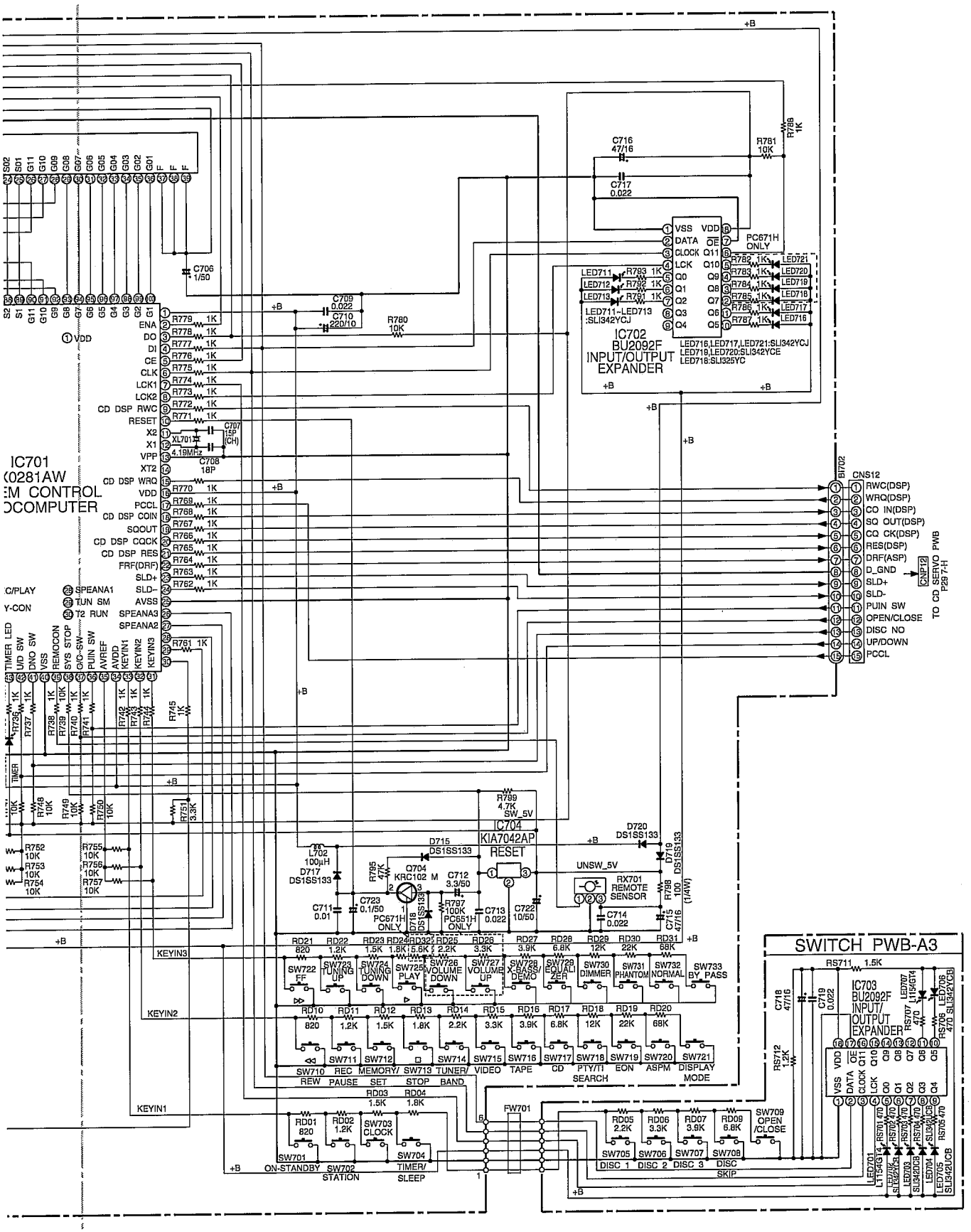

7	8	9	10	11	12

Figure 27 SCHEMATIC DIAGRAM (6/13)

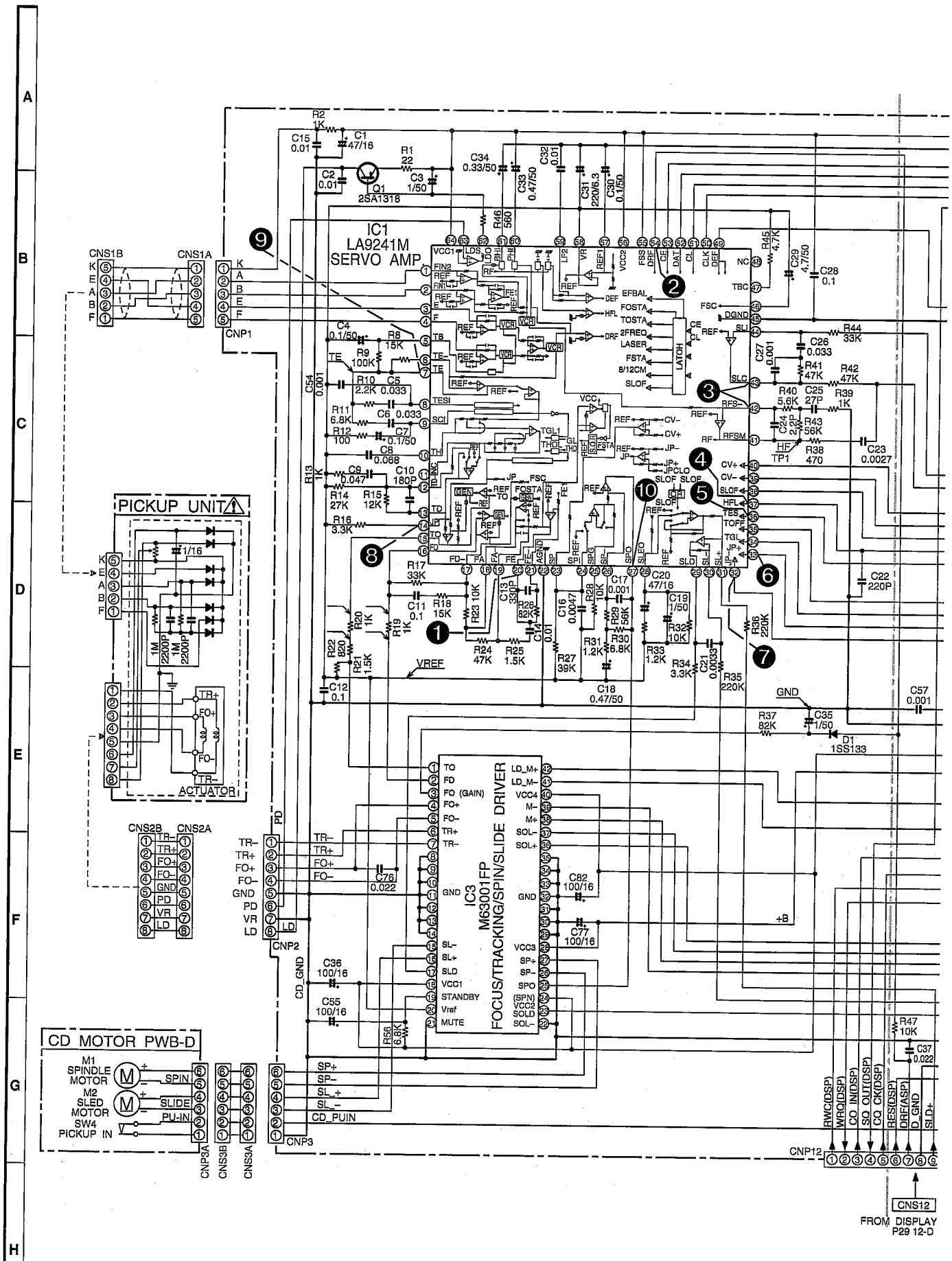

• NOTES ON SCHEMATIC DIAGRAM can be found on page 18.

Figure 28 SCHEMATIC DIAGRAM (7/13)

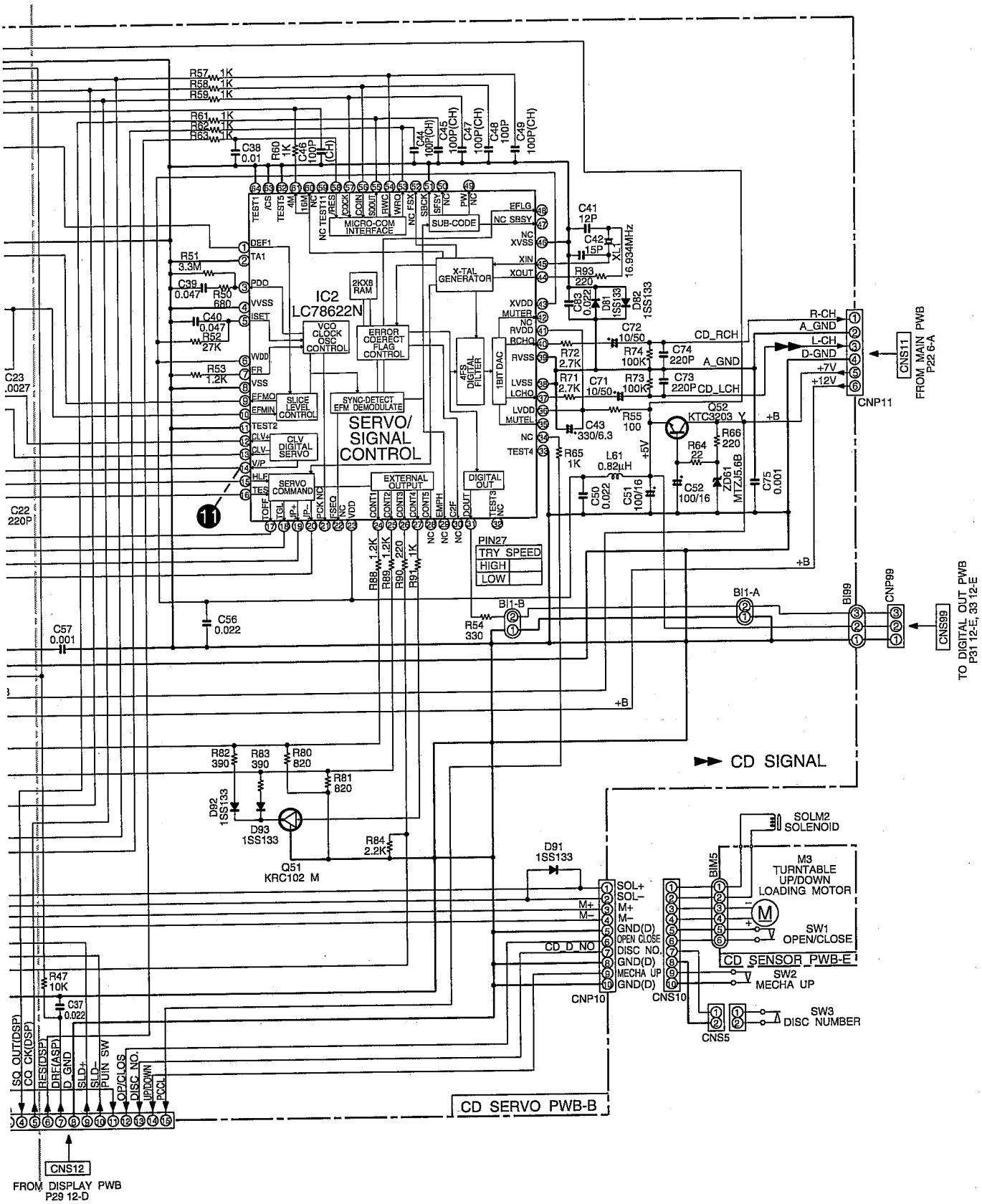

• The numbers ❶ to ⓬ are waveform numbers shown in page 47.

7	8	9	10	11	12

Figure 29 SCHEMATIC DIAGRAM (8/13)

CD-PC671H

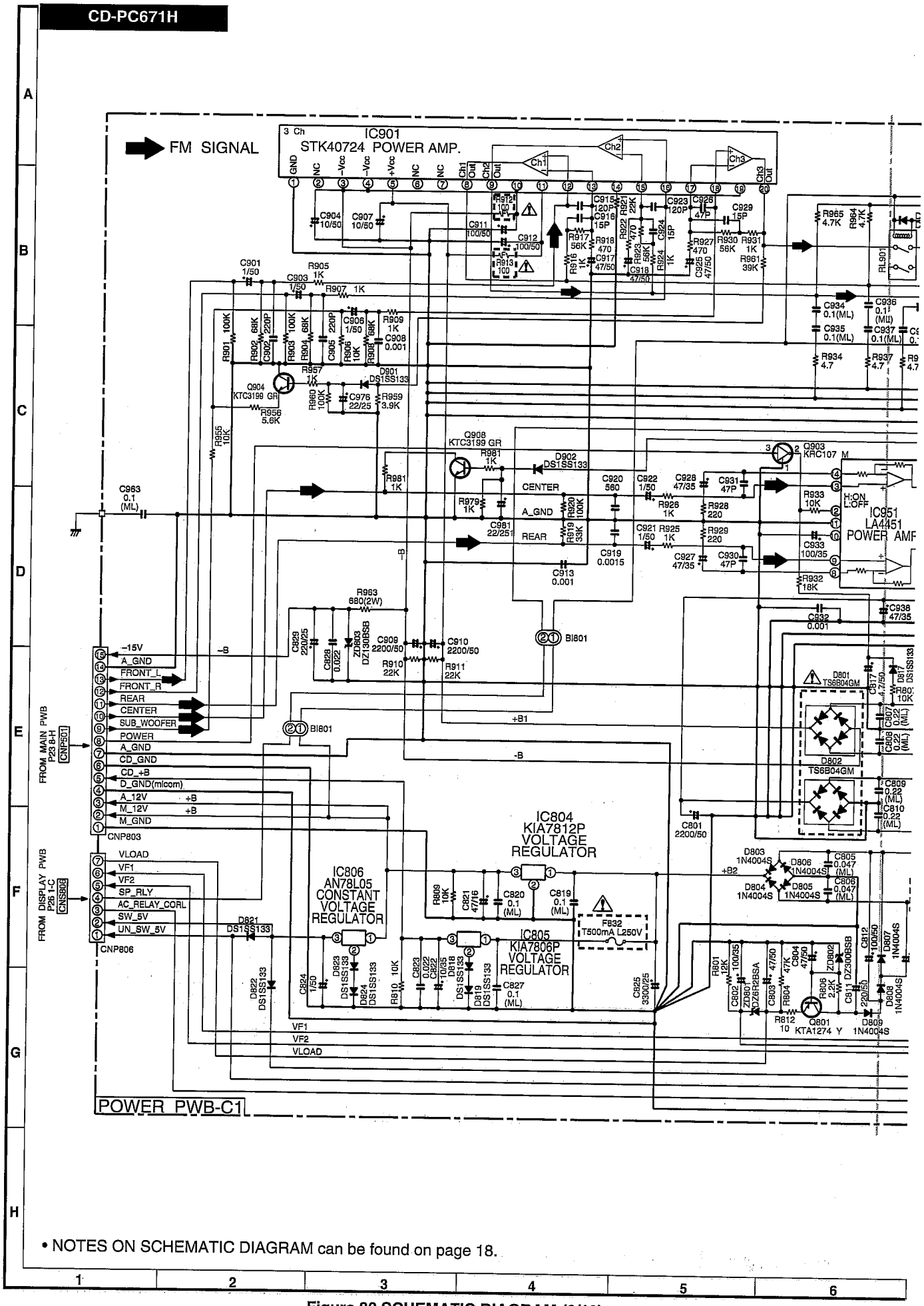

• NOTES ON SCHEMATIC DIAGRAM can be found on page 18.

Figure 30 SCHEMATIC DIAGRAM (9/13)

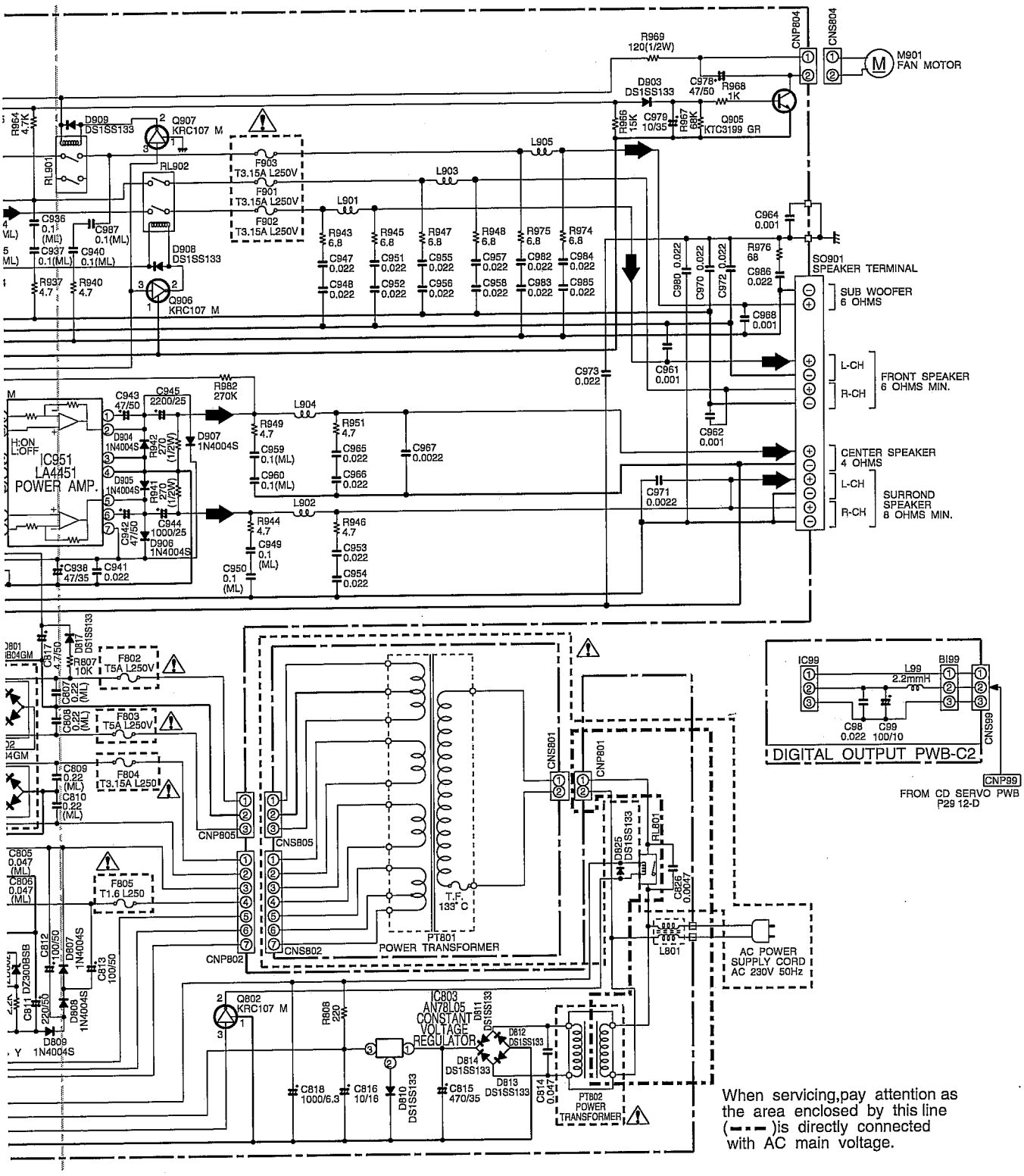

When servicing,pay attention as the area enclosed by this line (- - - -)is directly connected with AC main voltage.

7	8	9	10	11	12

Figure 31 SCHEMATIC DIAGRAM (10/13)

CD-PC651H

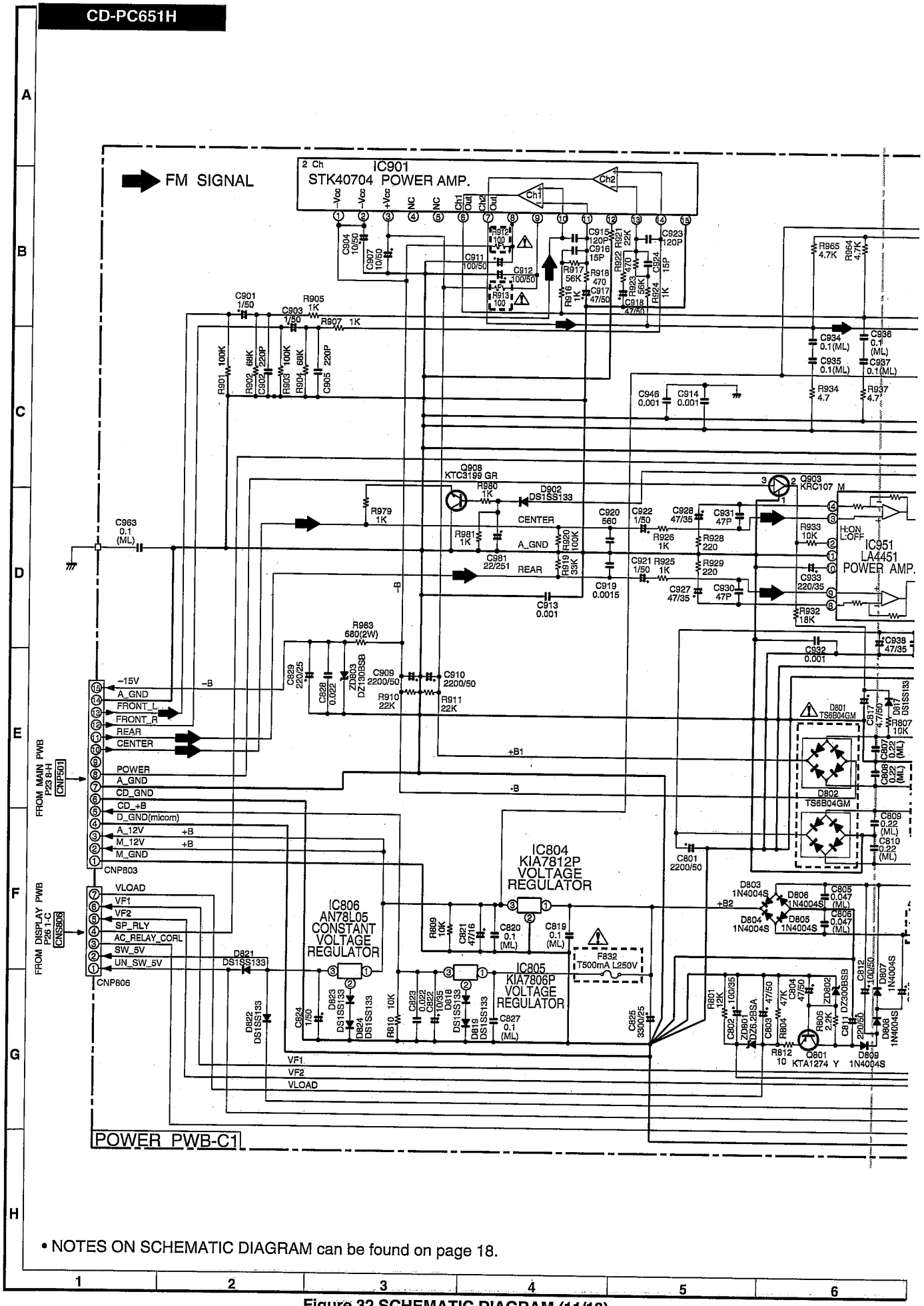

• NOTES ON SCHEMATIC DIAGRAM can be found on page 18.

Figure 32 SCHEMATIC DIAGRAM (11/13)

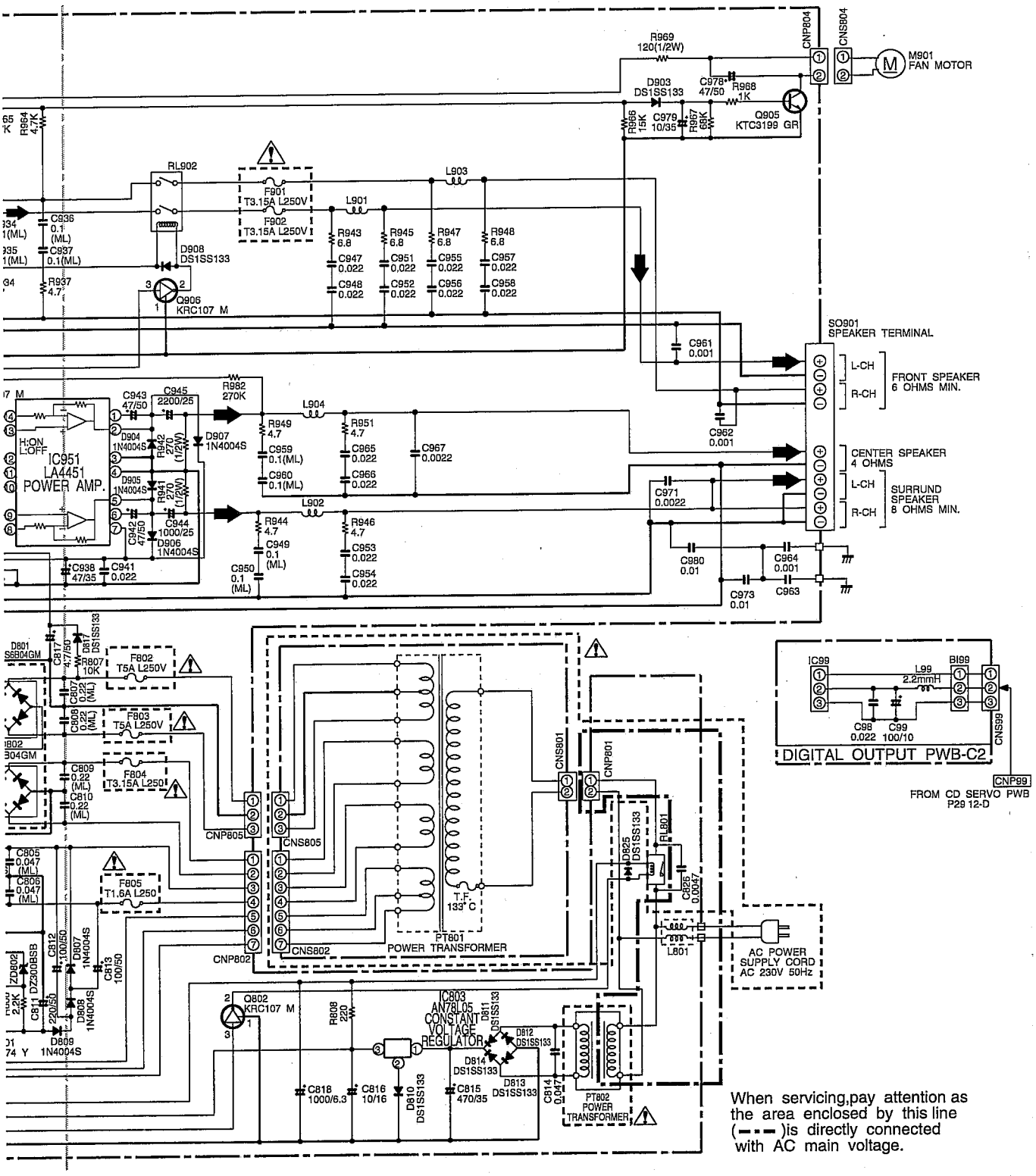

7	8	9	10	11	12

Figure 33 SCHEMATIC DIAGRAM (12/13)

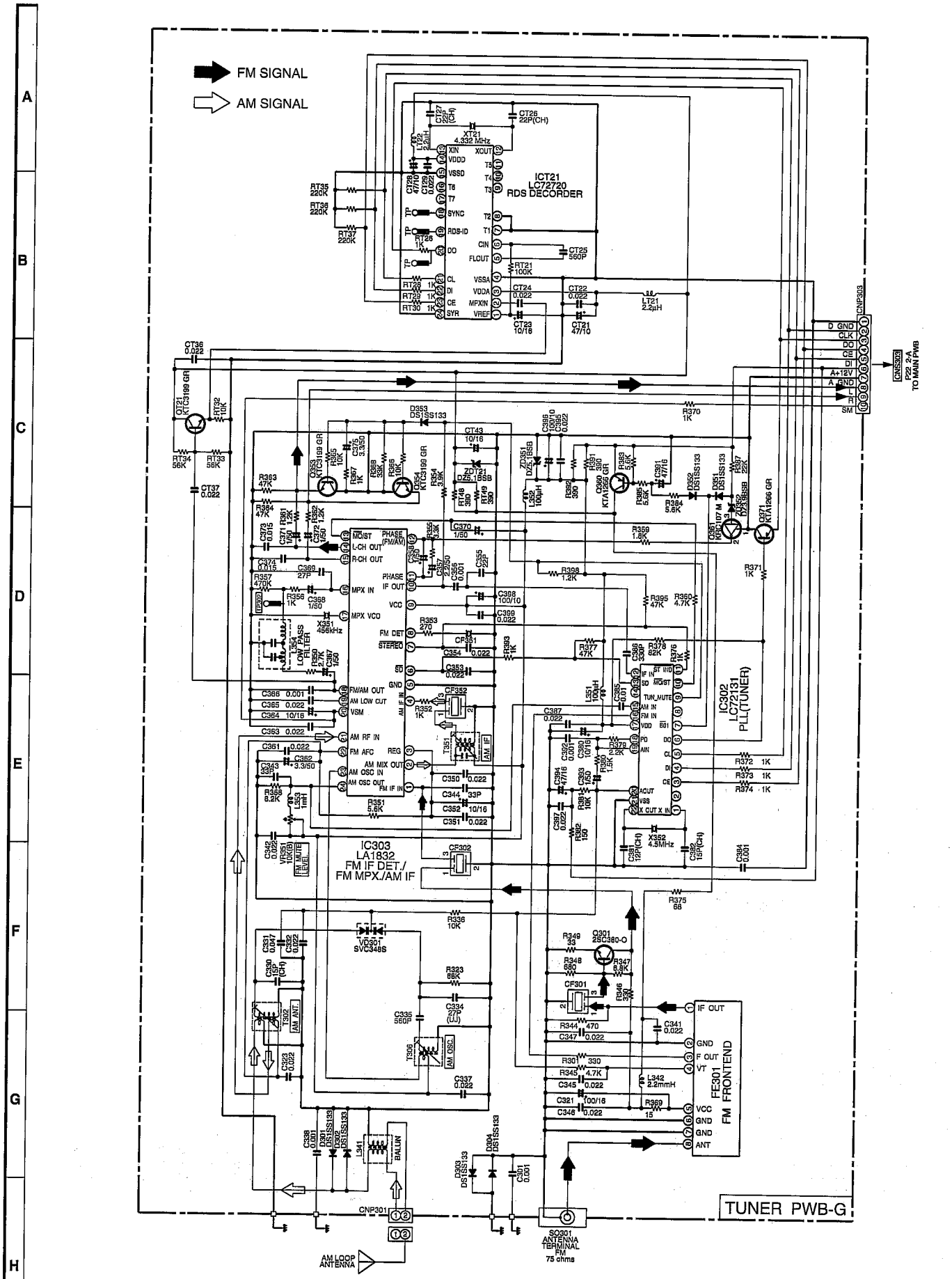

• NOTES ON SCHEMATIC DIAGRAM can be found on page 18.

Figure 34 SCHEMATIC DIAGRAM (13/13)

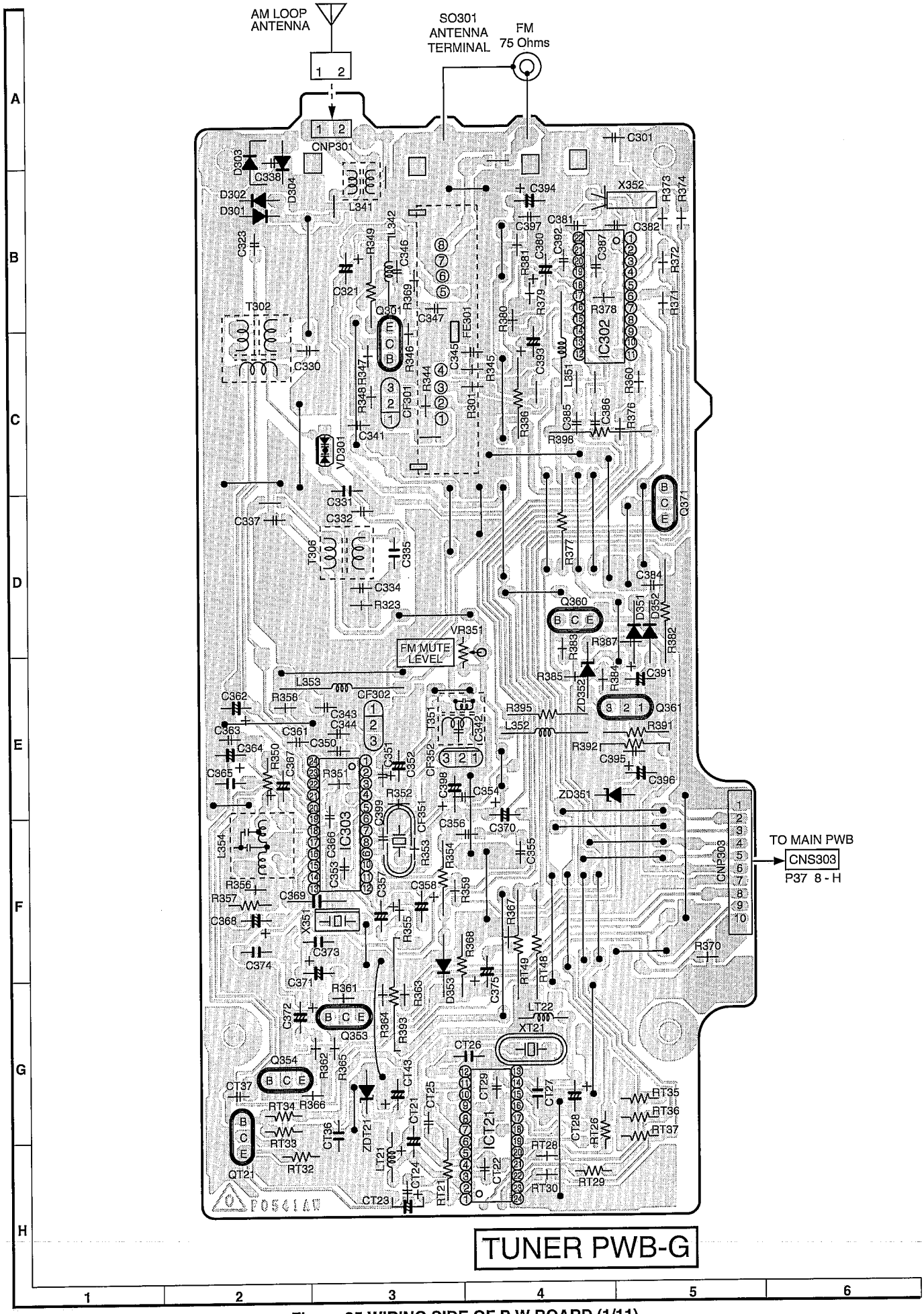

Figure 35 WIRING SIDE OF P.W.BOARD (1/11)

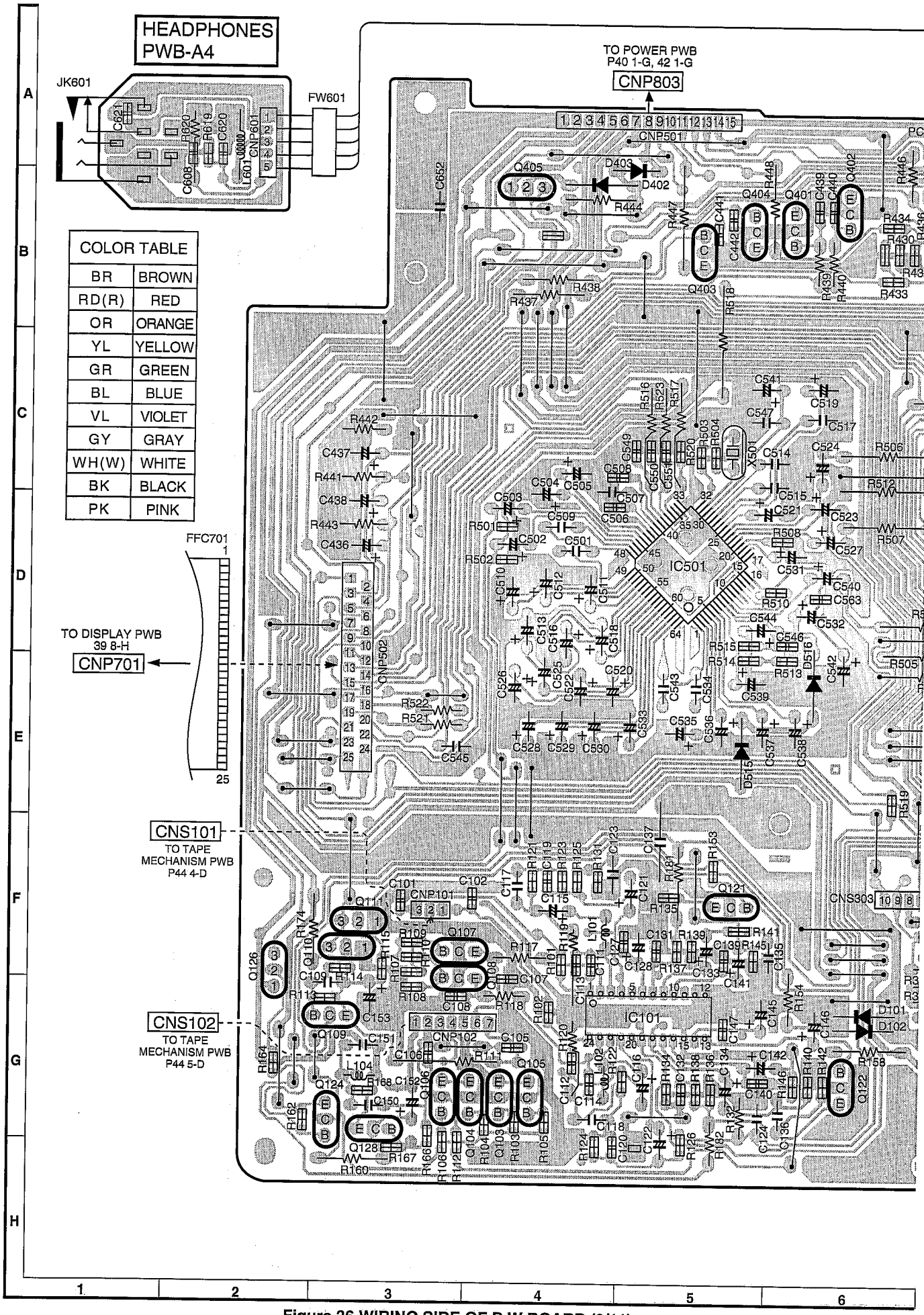

Figure 36 WIRING SIDE OF P.W.BOARD (2/11)

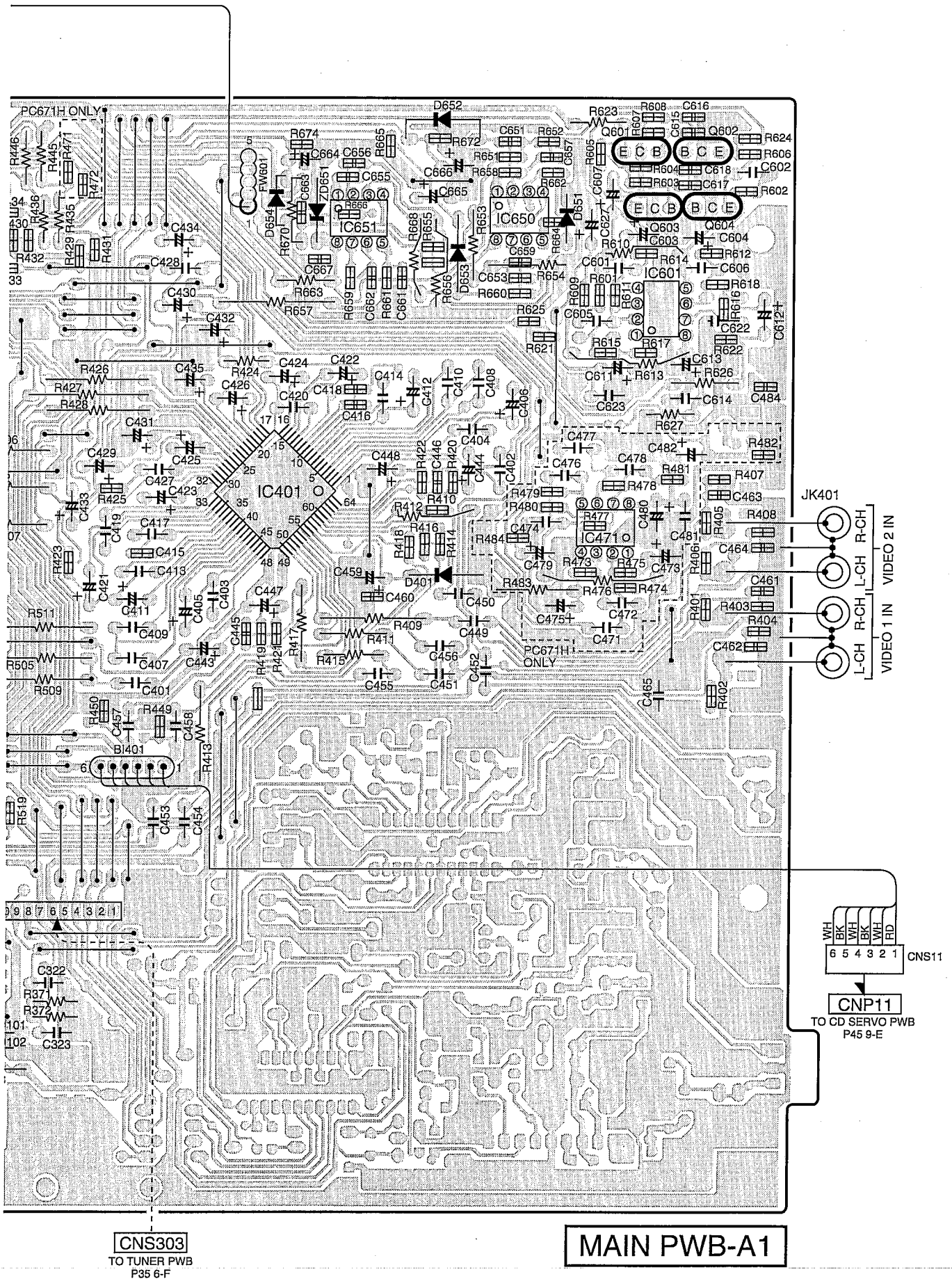

7	8	9	10	11	12

Figure 37 WIRING SIDE OF P.W.BOARD (3/11)

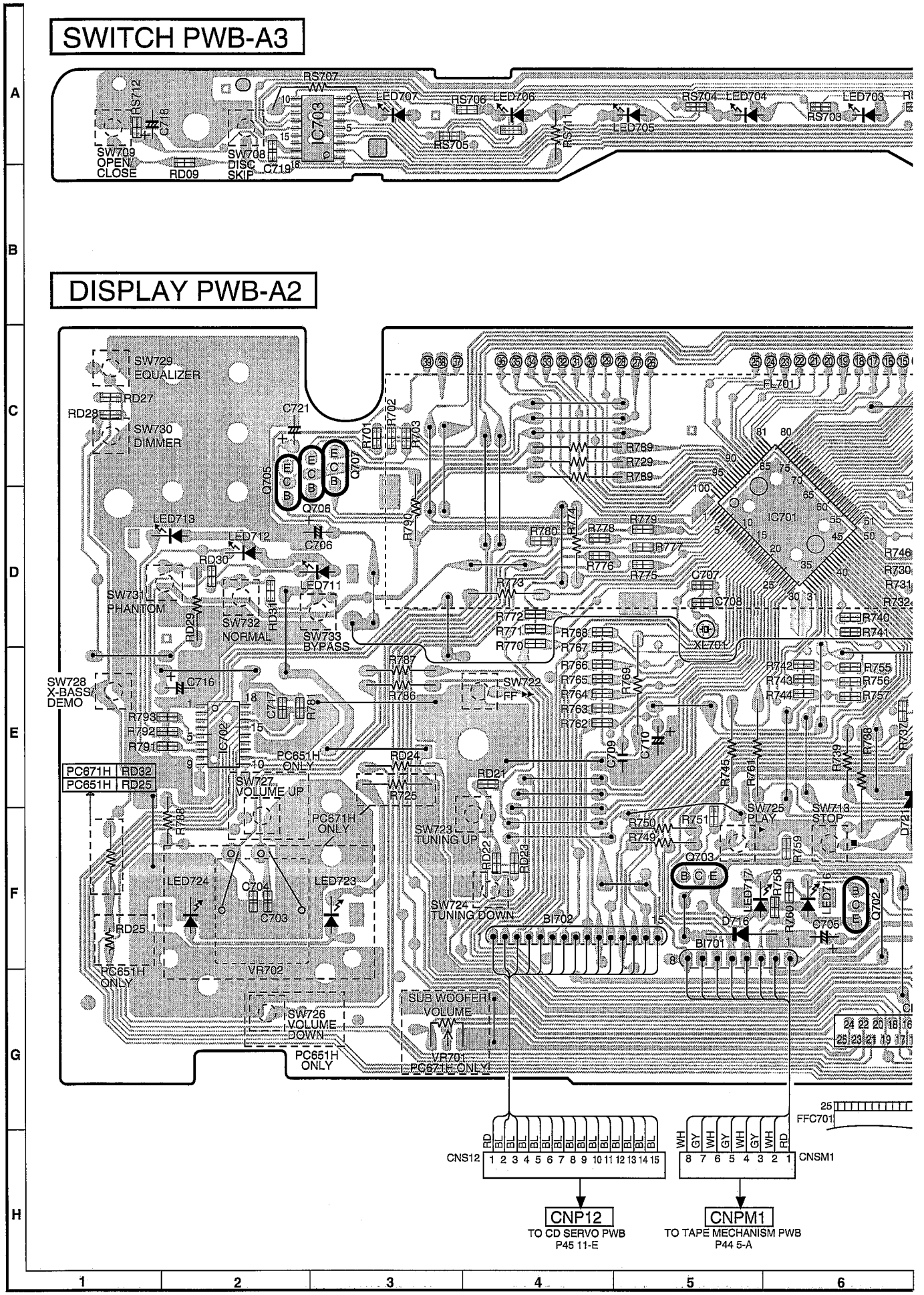

Figure 38 WIRING SIDE OF P.W.BOARD (4/11)

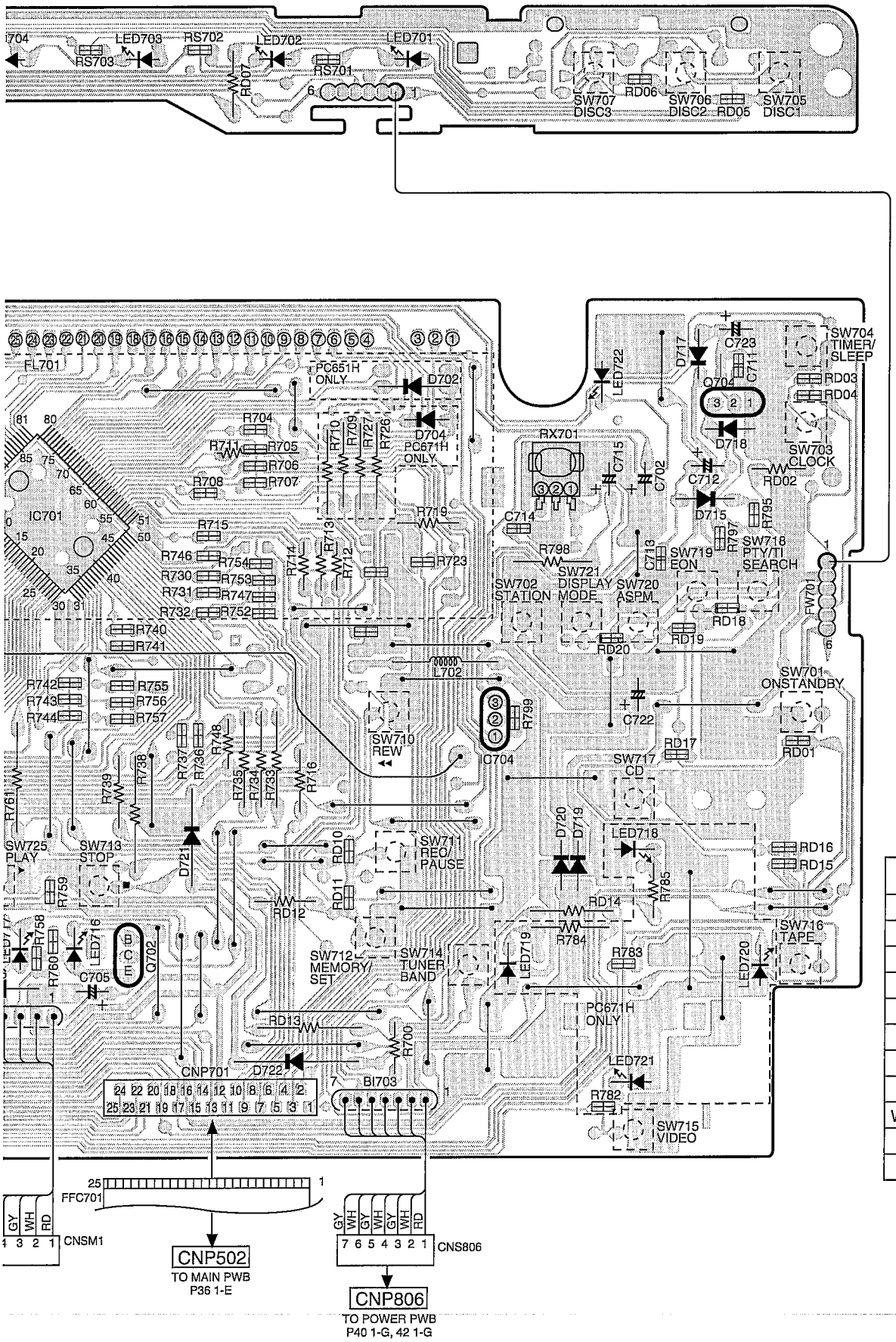

COLOR TABLE	
BR	BROWN
RD(R)	RED
OR	ORANGE
YL	YELLOW
GR	GREEN
BL	BLUE
VL	VIOLET
GY	GRAY
WH(W)	WHITE
BK	BLACK
PK	PINK

7	8	9	10	11	12

Figure 39 WIRING SIDE OF P.W.BOARD (5/11)

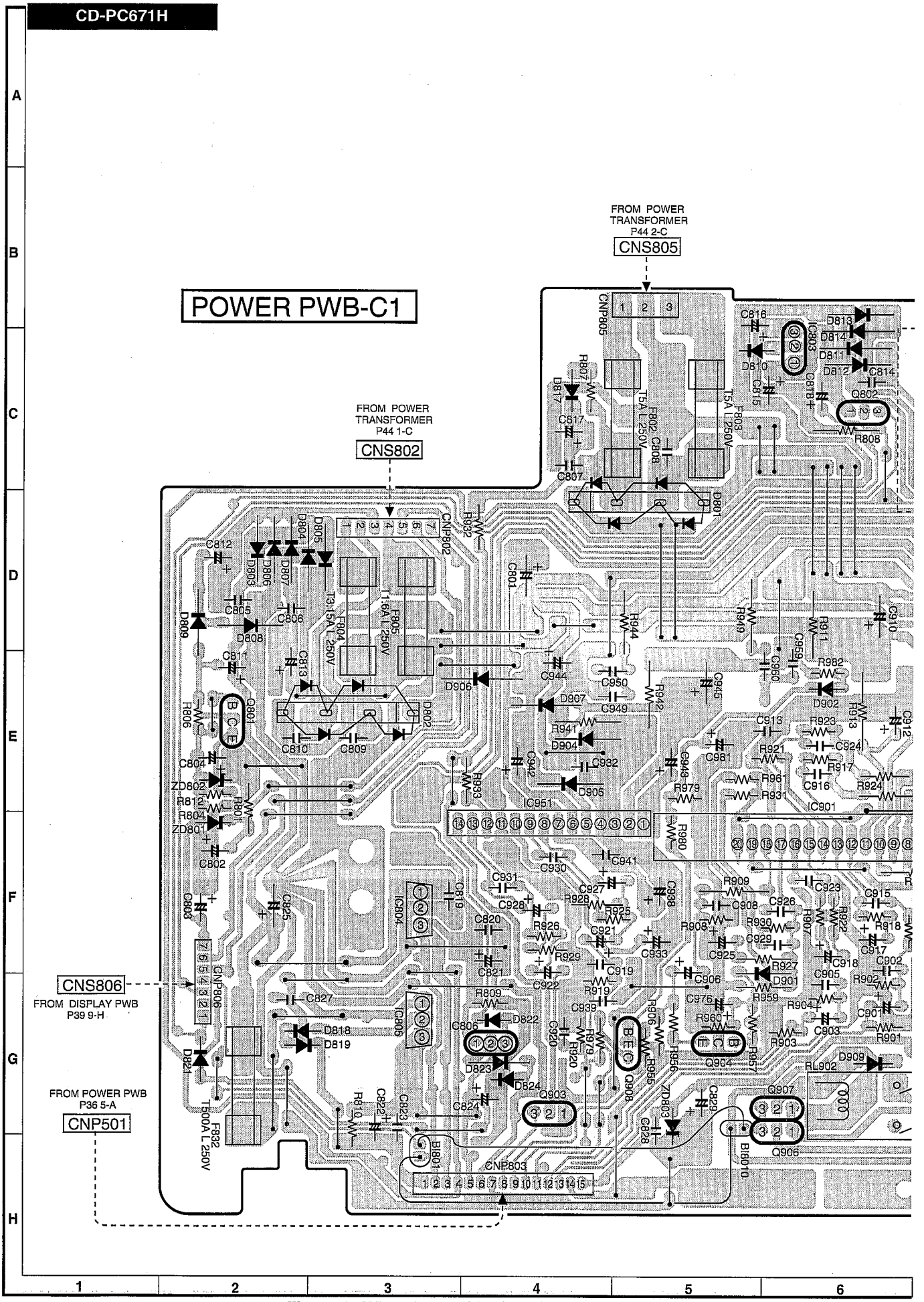

Figure 40 WIRING SIDE OF P.W.BOARD (6/11)

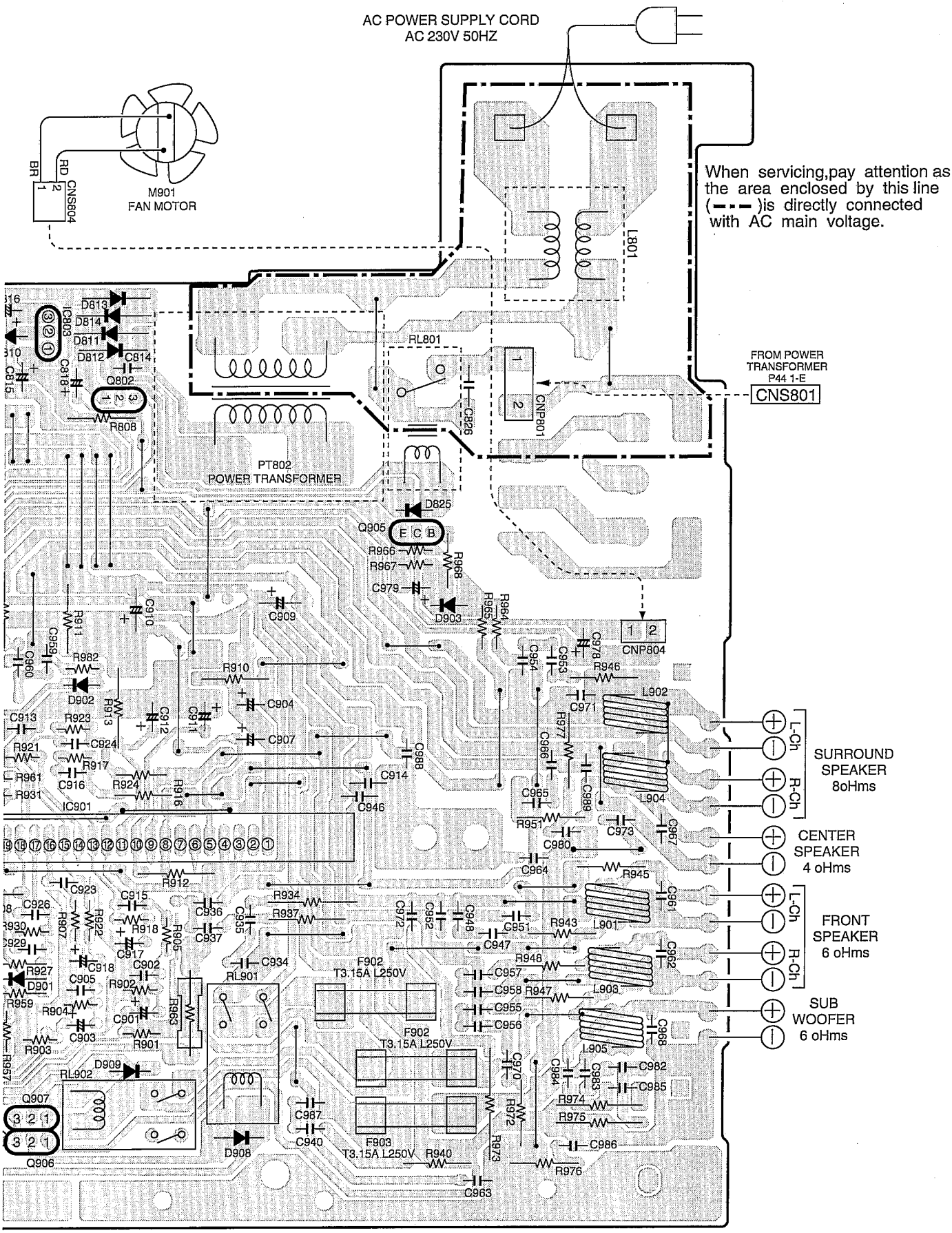

7	8	9	10	11	12

Figure 41 WIRING SIDE OF P.W.BOARD (7/11)

CD-PC651H

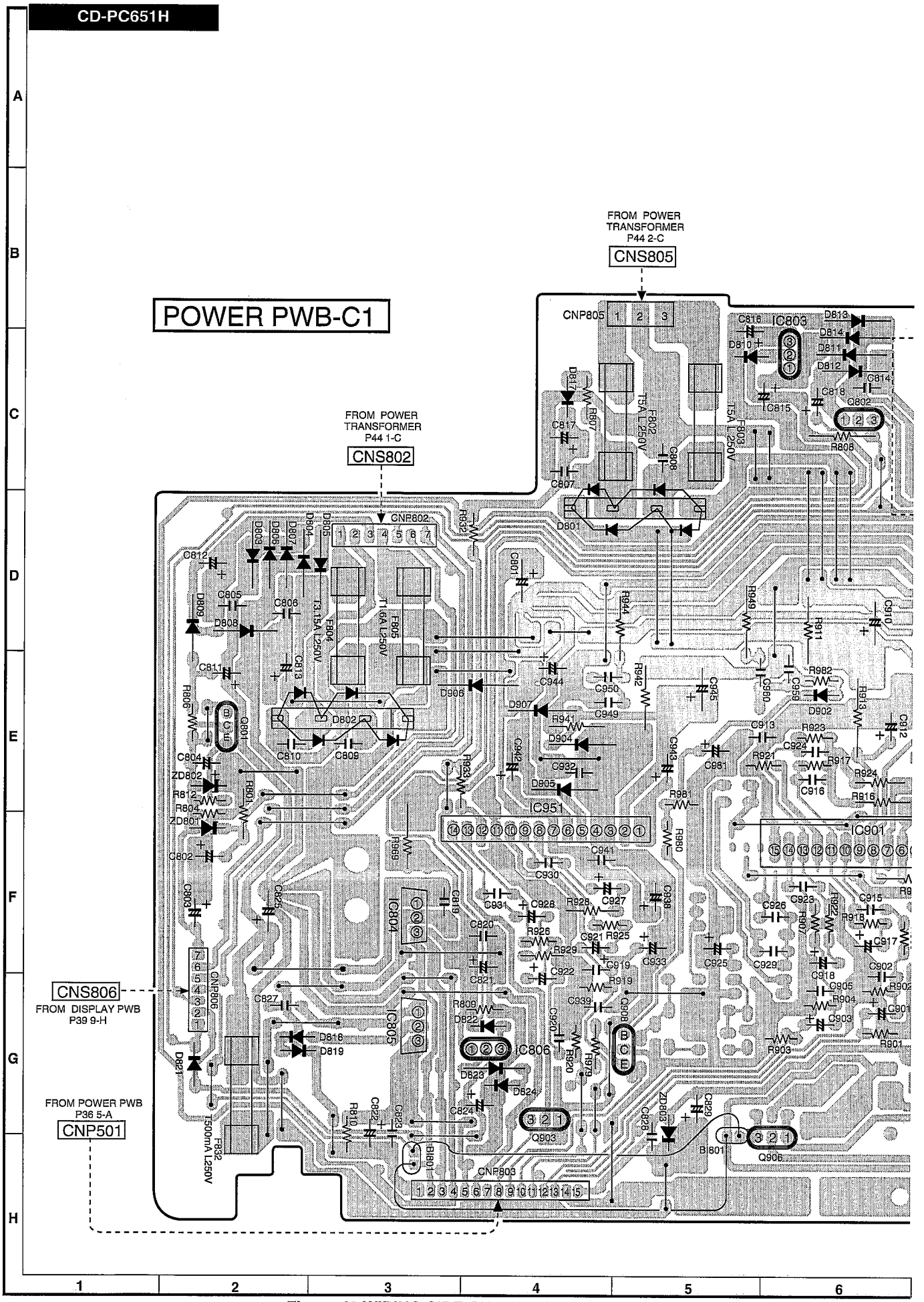

Figure 42 WIRING SIDE OF P.W.BOARD (8/11)

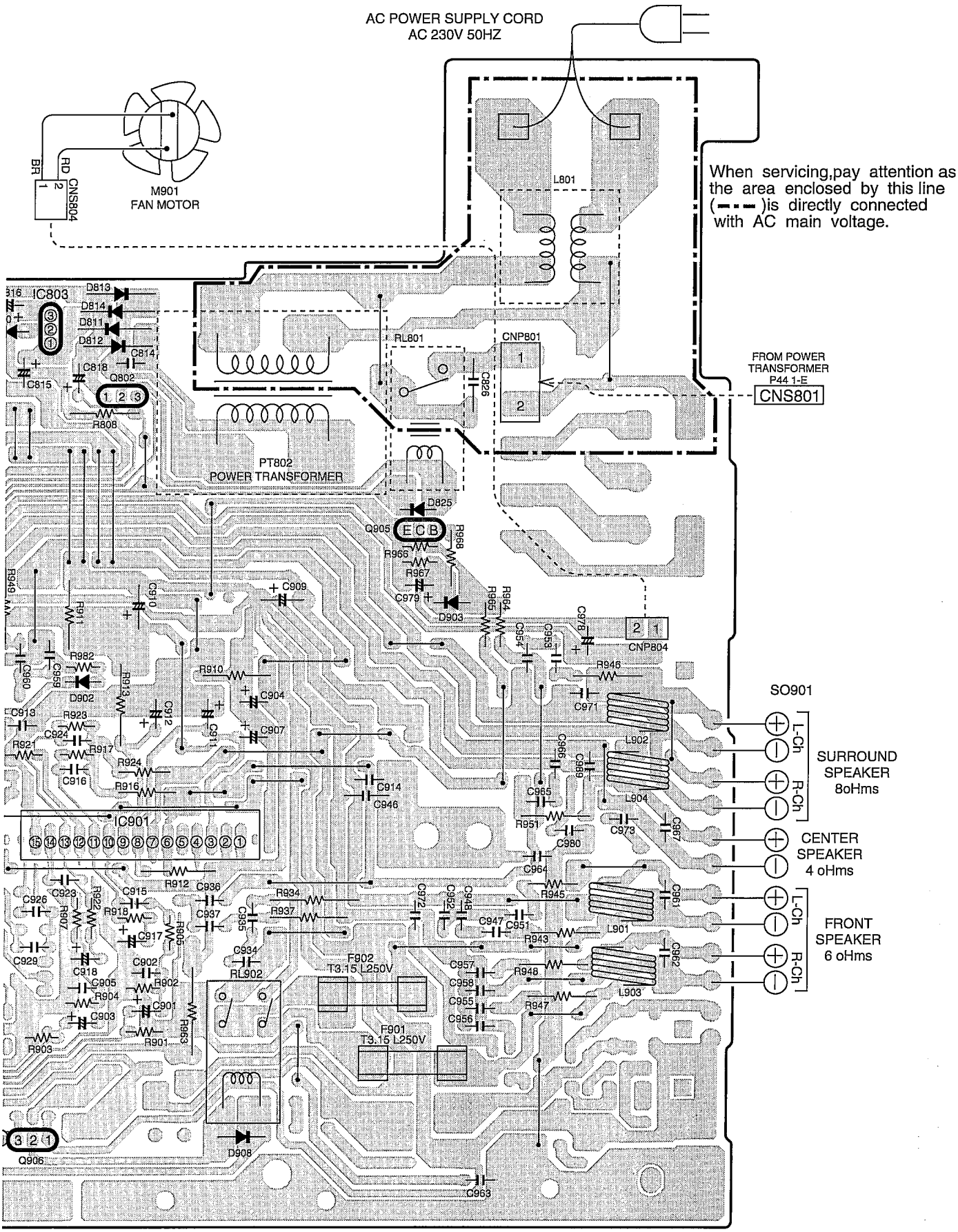

7	8	9	10	11	12

Figure 43 WIRING SIDE OF P.W.BOARD (9/11)

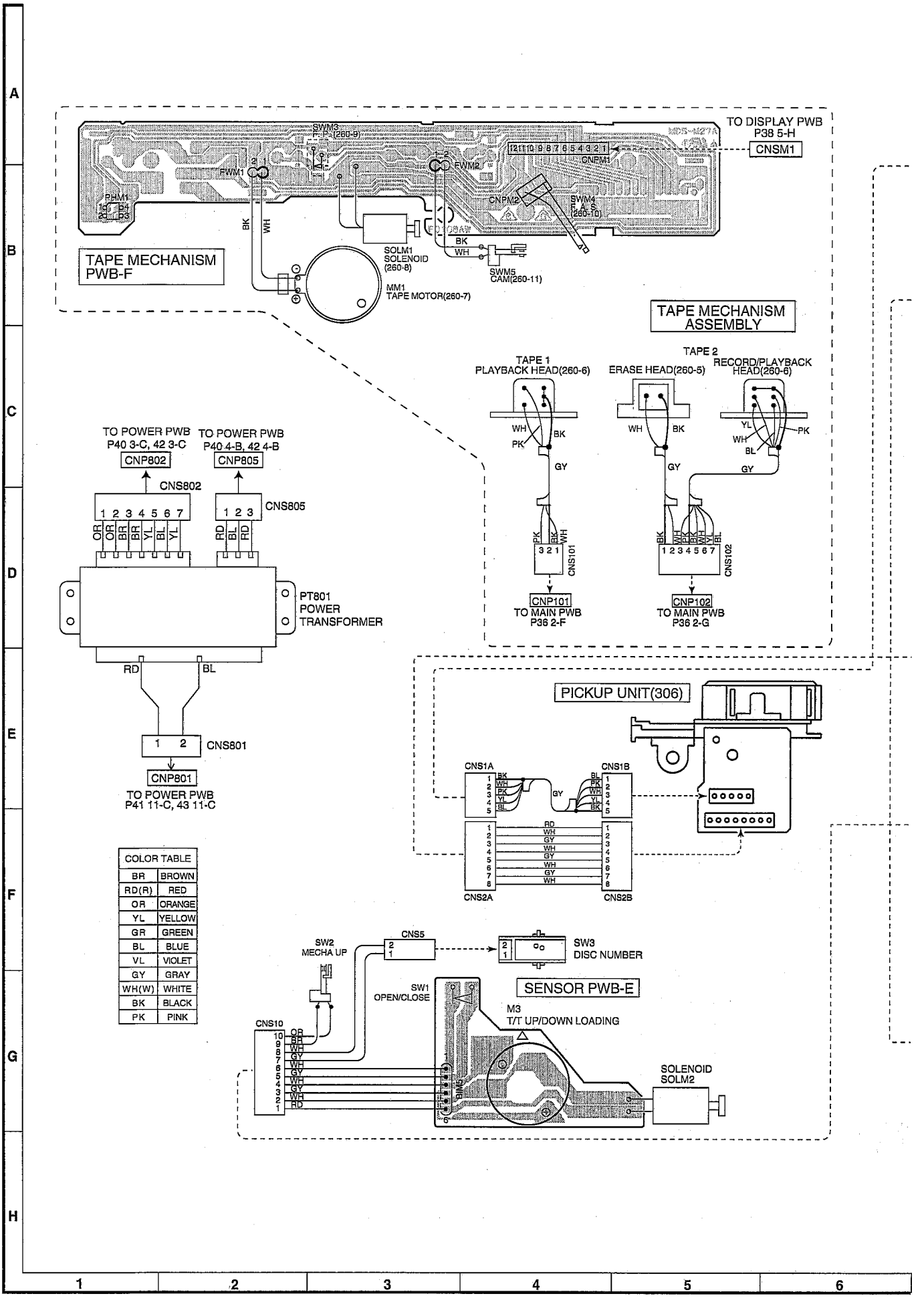

Figure 44 WIRING SIDE OF P.W.BOARD (10/11)

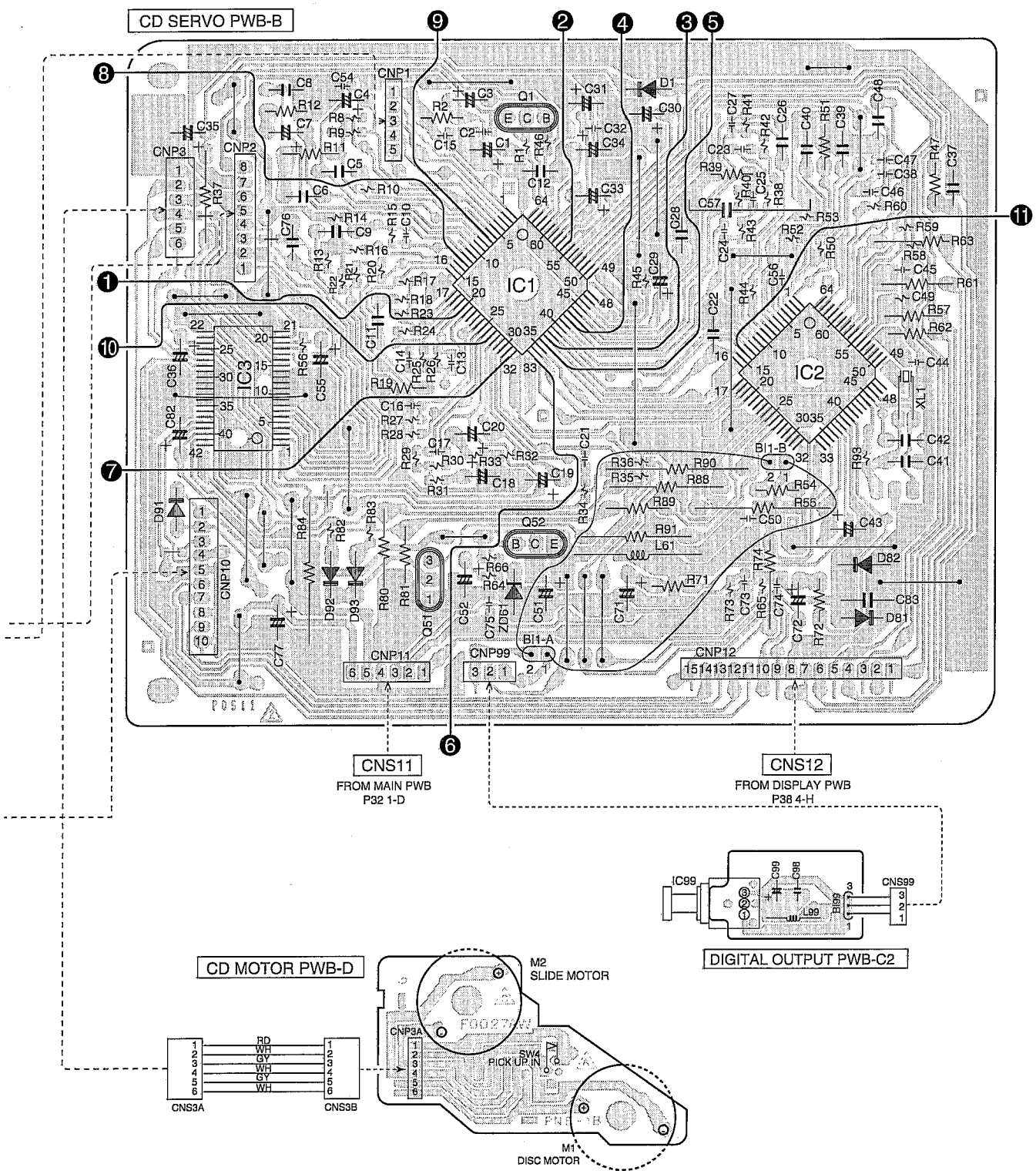

• The numbers ❶ to ⓬ are waveform numbers shown in page 47.

7	8	9	10	11	12

Figure 45 WIRING SIDE OF P.W.BOARD (11/11)

VOLTAGE

IC1	
PIN NO.	VOLTAGE
1	2.4V
2	2.4V
3	2.5V
4	2.5V
5	2.4V
6	2.5V
7	2.5V
8	2.5V
9	2.5V
10	2.5V
11	2.5V
12	2.5V
13	2.5V
14	2.5V
15	2.5V
16	2.5V
17	2.5V
18	2.5V
19	2.5V
20	2.4V
21	2.5V
22	0V
23	2.5V
24	2.5V
25	2.5V
26	2.5V
27	2.5V
28	2.5V
29	2.5V
30	2.2V
31	2.2V
32	0V
33	0V
34	4.8V
35	4.8V
36	0V
37	0V
38	4.8V
39	0V
40	0V
41	1.5V
42	2.4V
43	2.5V
44	2.4V
45	0V
46	2.5V
47	2.5V
48	0V
49	0V
50	2.4V
51	4V
52	4V
53	0V
54	0V
55	4.8V
56	4.8V
57	2.5V
58	2.5V
59	1.0V
60	1.0V
61	2.2V
62	4.2V
63	0V
64	4.8V

IC2	
PIN NO.	VOLTAGE
1	0V
2	0V
3	0V
4	0V
5	1.9V
6	4.8V
7	0V
8	0V
9	2.5V
10	2.5V
11	0V
12	0V
13	0V
14	4.8V
15	0V
16	0V
17	4.8V
18	4.8V
19	0V
20	0V
21	2.5V
22	0V
23	4.8V
24	0V
25	0V
26	0V
27	0V
28	0V
29	0V
30	4.8V
31	2.5V
32	0V
33	0V
34	0V
35	4.8V
36	4.5V
37	2.0V
38	0V
39	0V
40	2.0V
41	4.5V
42	4.8V
43	4.8V
44	2.2V
45	2.1V
46	0V
47	0V
48	2.2V
49	0V
50	2.4V
51	0V
52	2.4V
53	0V
54	0V
55	0V
56	4.0V
57	4.0V
58	4.0V
59	0V
60	2.5V
61	2.4V
62	0V
63	0V
64	0V

IC3	
PIN NO.	VOLTAGE
1	2.5V
2	2.6V
3	2.9V
4	3.3V
5	3.3V
6	3.3V
7	3.3V
8	0V
9	0V
10	0V
11	0V
12	0V
13	0V
14	0V
15	3.3V
16	3.3V
17	3.0V
18	7.2V
19	5.0V
20	2.5V
21	0V
22	0V
23	0V
24	7.2V
25	2.5V
26	3.3V
27	3.3V
28	11.2V
29	0V
30	0V
31	0V
32	0V
33	0V
34	0V
35	0V
36	5.3V
37	5.3V
38	3.3V
39	3.3V
40	7.2V
41	0.1V
42	0.1V

IC301	
PIN NO.	VOLTAGE
1	0.9V (0V)
2	1.6V (0V)
3	6.0V (0.4V)
4	1.6V (0V)
5	0V (0V)
6	6.0V (0.3V)
7	5.2V (0.2V)
8	5.9V (0.3V)
9	6.0V (0.3V)

IC650	
PIN NO.	VOLTAGE
1	0.12V
2	0.1V
3	0.13V
4	−11.2V
5	0.1V
6	0.1V
7	0.1V
8	6.2V

IC651	
PIN NO.	VOLTAGE
1	0.2V
2	0.2V
3	0.2V
4	−9.8V
5	0.2V
6	0.2V
7	0.2V
8	6.2V

IC702	
PIN NO.	VOLTAGE
1	0V
2	0V
3	0.2V
4	0V
5	9.8V
6	9.8V
7	9.8V
8	9.9V
9	9.8V
10	9.8V
11	9.8V
12	0.5V
13	0.5V
14	0.5V
15	9.8V
16	9.8V
17	0V
18	5.0V

IC703	
PIN NO.	VOLTAGE
1	0V
2	0V
3	0.2V
4	0V
5	9.8V
6	9.8V
7	9.8V
8	9.9V
9	9.8V
10	9.8V
11	9.8V
12	0.5V
13	0.5V
14	0.5V
15	9.8V
16	9.8V
17	0V
18	5.0V

IC101	
PIN NO.	VOLTAGE
1	0V (0V)
2	0V (0V)
3	0.5V (0.5V)
4	4.3V (4.3V)
5	0.2V (0.3V)
6	1.3V (1.3V)
7	0V (0V)
8	0.6V (0.6V)
9	4.1V (4.1V)
10	4.0V (4.0V)
11	0V (0V)
12	0V (0V)
13	8.1V (8.1V)
14	4.8V (4.8V)
15	0V (0V)
16	4.1V (4.1V)
17	0.6V (0.6V)
18	0V (0V)
19	2.5V (2.6V)
20	0.2V (0.3V)
21	4.3V (4.3V)
22	0.5V (0.5V)
23	0V (0V)
24	0V (0V)

IC471	
PIN NO.	VOLTAGE
1	5.6V
2	5.6V
3	5.5V
4	0V
5	5.6V
6	5.6V
7	5.6V
8	11.1V

IC601	
PIN NO.	VOLTAGE
1	5.6V
2	5.6V
3	5.5V
4	0V
5	5.5V
6	5.6V
7	5.6V
8	11.1V

IC302	
PIN NO.	VOLTAGE
1	2.5V (2.5V)
2	0V (0V)
3	0V (0V)
4	0V (0V)
5	4.5V (4.5V)
6	4.5V (4.5V)
7	0.2V (11.9V)
8	0V (0V)
9	0V (0V)
10	0V (0V)
11	5.1V (5.1V)
12	0V (0V)
13	0V (0V)
14	0V (0V)
15	0V (2.5V)
16	2.5V (0V)
17	5.1V (5.1V)
18	0.9V (0.9V)
19	0.9V (0.9V)
20	1.3V (1.1V)
21	0V (0V)
22	2.5V (2.5V)

IC401	
PIN NO.	VOLTAGE
1	5.0V
2	5.0V
3	4.9V
4	4.8V
5	5.0V
6	4.9V
7	4.8V
8	5.0V
9	4.8V
10	4.8V
11	5.0V
12	4.9V
13	4.8V
14	5.0V
15	4.9V
16	5.0V
17	5.0V
18	4.9V
19	5.0V
20	5.0V
21	5.0V
22	5.0V
23	4.0V
24	-0.1V
25	-0.1V
26	0V
27	5.0V
28	5.0V
29	5.0V
30	4.9V
31	5.0V
32	5.0V
33	4.9V
34	5.0V
35	4.8V
36	4.9V
37	5.0V
38	4.8V
39	4.8V
40	5.0V
41	4.8V
42	4.9V
43	5.0V
44	4.8V
45	4.9V
46	5.0V
47	5.0V
48	4.9V
49	5.0V
50	5.0V
51	5.0V
52	5.0V
53	5.0V
54	5.0V
55	5.0V
56	10.0V
57	5.0V
58	5.0V
59	5.0V
60	5.0V
61	5.0V
62	5.0V
63	5.0V
64	4.9V

IC303	
PIN NO.	VOLTAGE
1	1.6V (1.6V)
2	1.6V (1.6V)
3	7.1V (8.1V)
4	0.2V (0.6V)
5	1.6V (1.6V)
6	0V (0V)
7	5.1V (5.1V)
8	0V (0V)
9	2.3V (2.3V)
10	2.3V (2.3V)
11	6.4V (8.1V)
12	0.9V (0.9V)
13	1.1V (2.1V)
14	1.8V (1.6V)
15	2.2V (1.3V)
16	1.7V (1.7V)
17	1.6V (1.7V)
18	1.6V (1.6V)
19	0.4V (0.5V)
20	7.1V (8.1V)
21	7.1V (8.1V)
22	1.7V (1.7V)
23	1.7V (1.7V)
24	1.7V (1.7V)

IC501	
PIN NO.	VOLTAGE
1	4.7V
2	4.7V
3	4.7V
4	4.7V
5	4.7V
6	4.7V
7	4.7V
8	9.4V
9	4.7V
10	4.7V
11	4.7V
12	4.7V
13	4.7V
14	4.7V
15	4.7V
16	4.7V
17	0V
18	9.4V
19	2.5V
20	0.6V
21	-0.1V
22	4.7V
23	4.7V
24	4.7V
25	4.7V
26	4.7V
27	4.7V
28	4.7V
29	4.7V
30	4.7V
31	5.0V
32	2.3V
33	-0.1V
34	4.0V
35	-0.1V
36	3.6V
37	-0.1V
38	4.0V
39	0V
40	4.7V
41	4.8V
42	0V
43	4.7V
44	4.7V
45	4.7V
46	4.7V
47	4.7V
48	4.7V
49	4.7V
50	4.7V
51	5.4V
52	4.7V
53	5.4V
54	4.6V
55	4.6V
56	4.6V
57	3.7V
58	3.5V
59	3.4V
60	5.4V
61	4.8V
62	5.4V
63	4.7V
64	4.7V

IC701			
PIN NO.	VOLTAGE	PIN NO.	VOLTAGE
1	4.7V	51	4.7V
2	4.7V	52	0V
3	4.6V	53	0V
4	0V	54	4.7V
5	0V	55	0V
6	0V	56	0V
7	0V	57	4.6V
8	0V	58	4.6V
9	0V	59	4.6V
10	4.7V	60	4.6V
11	2.2V	61	0V
12	2.0V	62	4.7V
13	0V	63	4.7V
14	4.6V	64	5.0V
15	0V	65	4.9V
16	4.7V	66	−27.0V
17	0V	67	−27.0V
18	4.7V	68	−27.0V
19	0V	69	−27.0V
20	4.7V	70	−27.0V
21	4.7V	71	−27.0V
22	0V	72	−27.0V
23	0V	73	0V
24	0V	74	0V
25	0V	75	-26.0V
26	0V	76	−22.0V
27	0V	77	−24.0V
28	0V	78	0V
29	0V	79	−27.0V
30	0.9V	80	−24.0V
31	4.9V	81	−24.0V
32	4.9V	82	−24.0V
33	4.9V	83	0V
34	4.7V	84	0V
35	4.9V	85	−21.0V
36	4.6V	86	0V
37	4.6V	87	0V
38	4.9V	88	0V
39	4.9V	89	0V
40	0V	90	−24.0V
41	0V	91	0V
42	4.6V	92	−24.0V
43	3.5V	93	0V
44	11.9V	94	−24.0V
45	11.9V	95	0V
46	4.4V	96	−24.0V
47	4.6V	97	−24.0V
48	0V	98	−24.0V
49	4.6V	99	−24.0V
50	0V	100	−24.0V

IC803	
PIN NO.	VOLTAGE
1	7.1V
2	0.6V
3	5.5V

IC805	
PIN NO.	VOLTAGE
1	17.0V
2	1.3V
3	7.3V

IC804	
PIN NO.	VOLTAGE
1	17.0V
2	0V
3	12.0V

IC806	
PIN NO.	VOLTAGE
1	12.0V
2	1.3V
3	4.9V

IC901	
PIN NO.	VOLTAGE
1	0V
2	0V
3	-27.5V
4	-27.5V
5	-27.5V
6	0V
7	0V
8	0V
9	0V
10	-25.8V
11	26.0V
12	-0.15V
13	-0.15V
14	-24.6V
15	-0.1V
16	-0.1V
17	-0.1V
18	-0.1V
19	-27.5V
20	0V

IC901	
PIN NO.	VOLTAGE
1	26.8V
2	24.9V
3	0V
4	0V
5	25.0V
6	26.8V
7	29.2V
8	24.7V
9	24.1V
10	26.4V
11	0V
12	25.0V
13	24.1V
14	24.7V

WAVEFORMS OF CD CIRCUIT

STOP → PLAY

FOCUS— SERCH

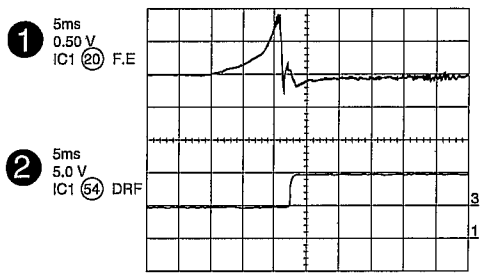

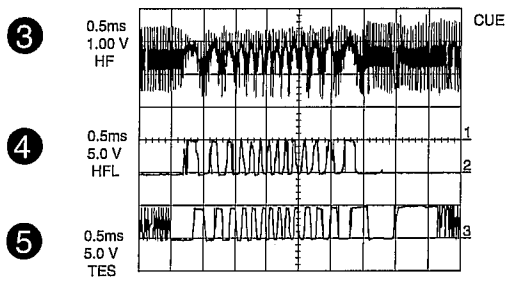

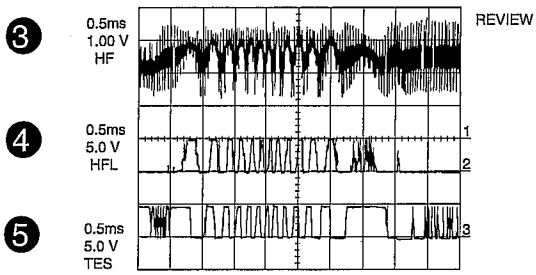

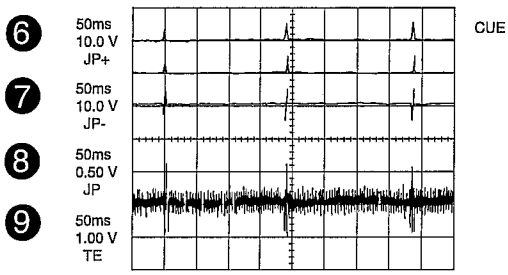

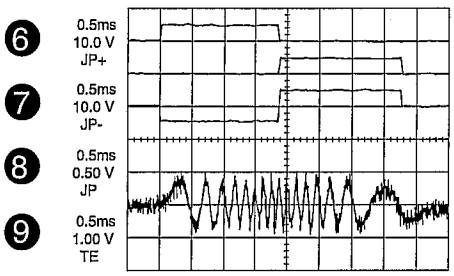

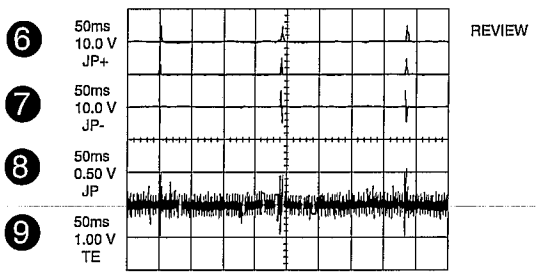

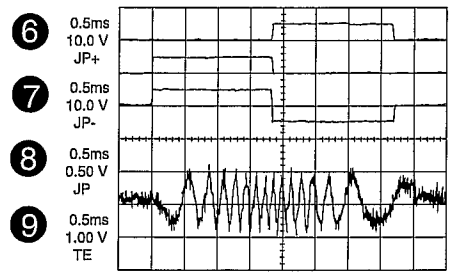

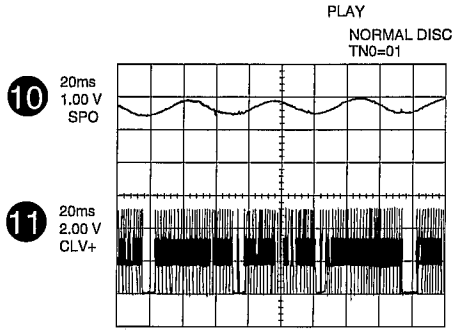

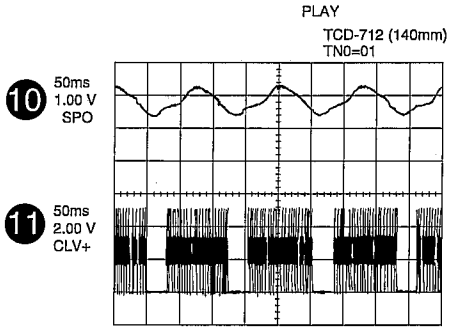

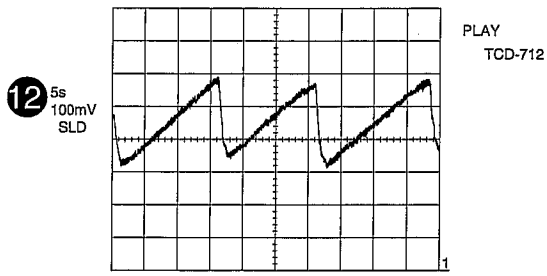

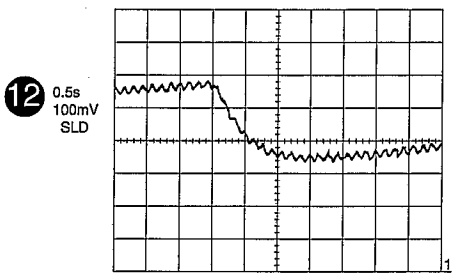

TROUBLESHOOTING (CD SECTION)

When the CD does not function

When the CD section does not operate when the objective lens of the optical pickup is dirty, this section may not operate. Clean the objective lens, and check the playback operation. When this section does not operate even after the above step is taken, check the following items.
Remove the cabinet and follow the troubleshooting instructions.
"Track skipping and/or no TOC (Table Of Contents) may be caused by build up of dust other foreign matter on the laser pickup lens. Before attempting any adjustment make certain that the lens is clean. If not, clean it as mentioned below."

Turn the power off.
Gently clean the lens with a lens cleaning tissue and a small amount of isopropyl alcohol.
Do not touch the lens with the bare hand.

Dust gradually accumulates on the objective lens during use, and it may degrade performance.
To avoid this problem, use a cleaning disc designed for CD optical pickup lenses.

HOW TO USE

1. Using the brush in the cleaner cap, apply 1 or 2 drops of the cleaning fluid to the brush on the CD cleaner disc which has ▲ the mark next to it.
2. Place the CD cleaner disc onto the CD disc tray with the brush side down, then press the play button.
3. You will hear music for about 20 seconds and the CD player will automatically stop. If it continues to turn, press the stop button.

CAUTION

- The CD lens cleaner should be effective for 30 - 50 operations, however if the brushes become worn out earlier then please replace the cleaner disc.
- If the CD cleaner brushes become very wet then wipe off any excess fluid with a soft cloth.
- Do not drink the cleaner fluid or allow it to come in contact with the eyes. In the event of this happening then drink and / or rinse with clean water and seek medical advice.
- The CD cleaner disc must not be used on car CD player or on computer CD ROM drives.
  All rights reserved. Unauthorized duplicating, broadcasting and renting product is prohibited by law.

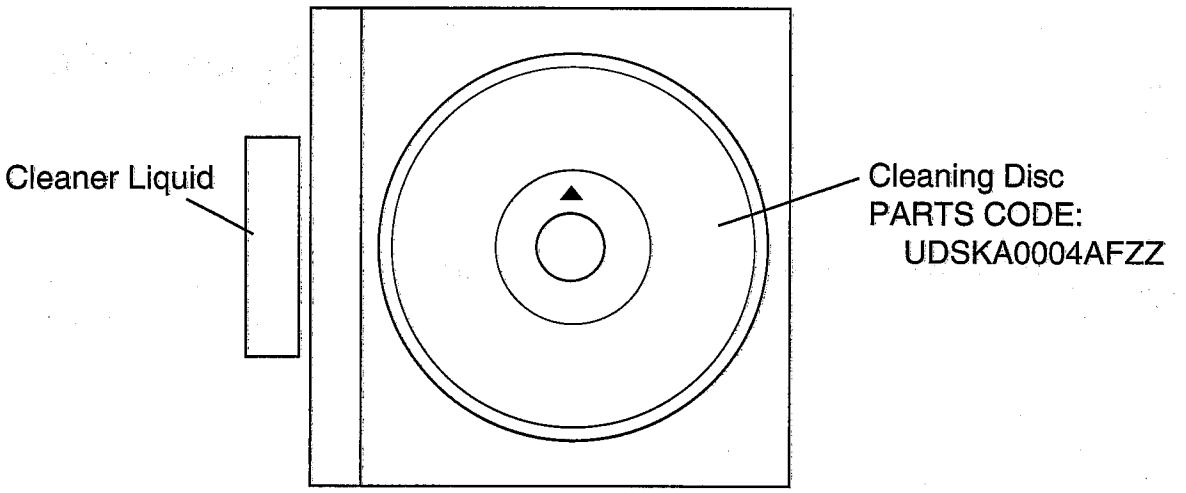

Figure 48

• When the turntable fails to stop.

Is from 5V 2.5V 0V 5 V till 2.5V down pulse (approx. 300 ms) input into the IC701 pin 21 when the turntable is rotating?

- No → Check the SWM3 and the wiring from the IC701 pin 21 to the SWM3.
- Yes ↓

Is there following voltage input on the IC701 pin 21 in the specific state?
When the CD mechanism is moved up: 0V
In other states: 4.3V

- No → Check the MECHA UP SW and the wiring from the IC701 pin 21 to the MECHA UP SW.
- Yes ↓

Check IC2 pin26 the periphery.

- Yes ↓

IC701 defective.

• When turntable fails to move.

Is there following voltage input on the IC701 pin 21 in the specific state?
When the CD mechanism is moved up: 0V
In other states: 4.3V

- No → Check the MECHA UP SW and the wiring from the IC701 pin 21 to the MECHA UP SW.
- Yes ↓

Is L output from the IC2 pin 26 during SEC when the disc skip switch is pressed?

- No → Check the wiring of IC2 pin 26.
  - OK ↓ IC2 defective.
- Yes ↓

Check turntable motor and turntable mechanism.

• When the CD tray fails to open or close.

Is there following voltage input in specific state of IC701 pin 19?
Open state: 0V
Close state: 0V
Intermediate state between open state and close state: 4.3V

No → Check the OPEN CLOSE SW and the wiring from the IC701 pin 19 to the OPEN CLOSE SW.

Yes ↓

Is H output to IC2 pin 24 or 25 for 7 seconds when the OPEN/CLOSE key is pressed?IC91 is defective. Replace it.

No → Check the wiring of the IC2 pins 24 and 25.

OK ↓

IC2 defective.

Yes ↓

Check the loading motor (M1) and the loading mechanism.

• The CD function will not work.

The CD operating keys don't work.

Yes ↓

Check the CD, DSP, power supply, and 16.93 MHz clock, and reset terminal.

Yes ↓

Check the waveform of SCK, SO (DATA) and SI (COMM).

Yes ↓

See if the pick-up is in thePICKUP IN SW position.

Yes ↓

If the items mentioned above are OK, check the main microcomputer IC701.

• The CD operating keys work.

Check the Focus - HF system.

↓

Playback can be performed without a disc.

Yes ↓

Does the pick-up move up and down twice?

Yes → Focus search OK

No ↓

Does the output waveform of IC1(16)(FD) match that shown in Fig. 50?

Yes → Check the area around IC3-CNP2.

No ↓

Check the IC1(50)(CLK) line, 4MHz.
Check the microcomputer data on pins (51)(CL), (52)(DAT) and (53)CE.

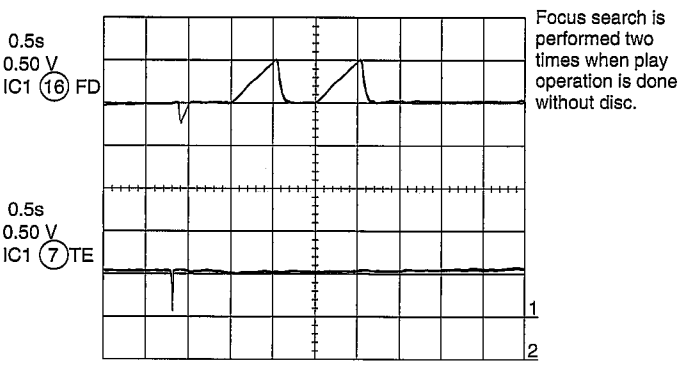

Figure 50

• Playback can only be performed when a disc is loaded.

Is the Focus servo active? (Can you hear it working?)
- No → Check the laser diode driver. Check the area around IC1(16) - (21) (focus servo circuit).
- Yes ↓

Does the DRF signal change from "L" to "H"?
- No → If the disc is not turning, the DRF should not change to "H". Yes → Check the spin system.
- Yes ↓

Is HF waveform normal (see the Fig.51-1, 2)?
- No → Level is abnormal. Yes → Check the periphery of IC1 pins 41 and 42.
- No → Waveform is unstable. Yes → Check the spin system.
- Yes ↓

Check the tracking system.

HF
1.0V/DIV
0.5µsec/DIV(DC)
IC1 (41)
(When playing back the disc)

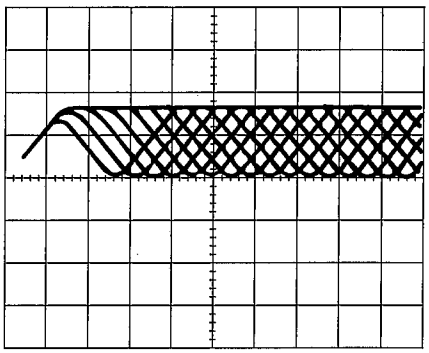

Figure 51-1

0.5s
1.00 V
IC1 (16) FD

0.5s
10.0 V
IC2 (13) CLV+

0.5s
10.0 V
IC1 (54) DRF

0.5s
2.00 V
IC1 (7) TE

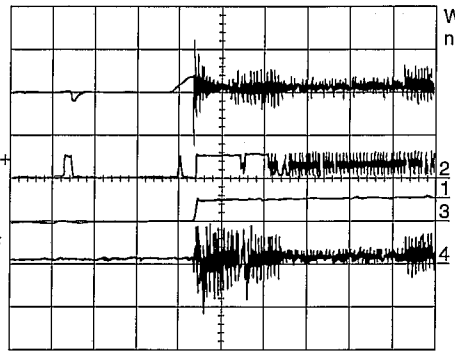

Waveform in case of normal play-back

Figure 51-2

• Check the tracking system.

Check waveform of IC1 pin 7 (TE).
- The waveform shown in Fig.51-3 appears, and no-disc state appears soon. Yes → Tracking servo is inoperative. Yes → Check the periphery of IC 1 pin 8 to pin 15, and IC 3 to CNP2.
- Play is possible in TEST mode. Yes → The unit will be initialized in normal mode, but it will not play back. Yes → Normal jump is impeded, and the program top cannot be reached. Yes → Check the periphery of IC 1 pin 14.
- Data cannot be read. Yes → Check the VCO-PLL system.

5ms
1.00 V
IC1 (7) TE

5 ms
5.0 V
IC1 (54) DRF

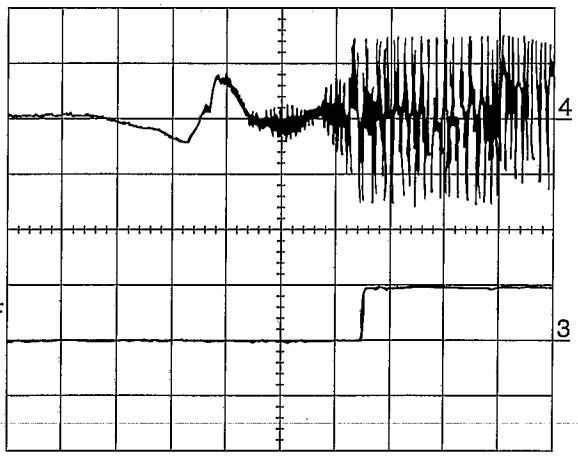

Figure 51-3

• Checking the spin system.

Play operation is performed without disc.

↓ Yes

The turntable rotates a little. → Yes → The spin driver circuit is normal.

↓ No

The turntable fails to rotate or rotates at high speed. → Yes → Check the periphery of IC1 pins 23 to 27, pin 39, and pin 40, IC2 pin 12 and pin 13, IC3 to CNP3.

• Checking the VCO-PLL system

Play operation is performed when disc exits.

↓ Yes

Although HF waveform is normal, TOC data cannot be read. → Yes → Check PDO waveform (Fig. 52).

↓ Abnormal

Check the IC1 pins 43 and 44, IC2 pins 3, 5, 7, 10, and 11.

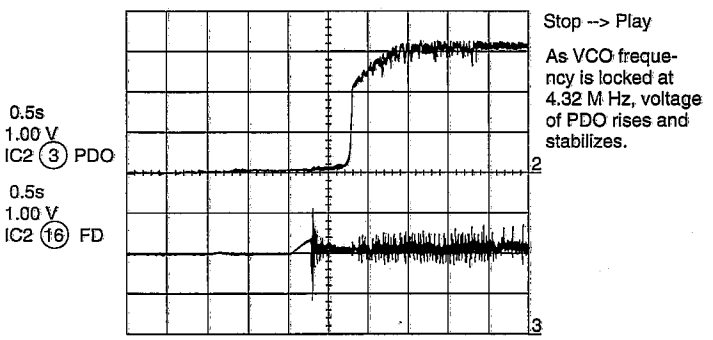

Figure 52

• Although HF waveform is normal and the time indication is normal, no sound is emitted.

Check IC 2 pin 48 (EFLG). → No → Usually, the number of pulses of flawless disc is 100 pulses/sec or less.

↓ Yes

Check IC2 pins 37, 40.

FUNCTION TABLE OF IC

IC1 VHiLA9241M/-1: Servo Amp. (LA9241M) (1/2)

Pin No.	Port Name	Function
1	FIN2	Connection pin for photodiode of pickup. RF signal is generated through addition with FIN pin, and FE signal is generated through subtraction.
2	FIN1	Connection pin for photodiode of pickup.
3	E	Connection pin for photodiode of pickup. TE signal is generated through subtraction with F pin.
4	F	Connection pin for photodiode of pickup.
5	TB	Pin for input of DC component of TE signal.
6	TE-	Pin to connect gain setting resistor of TE signal to TE signal.
7	TE	TE signal output pin.
8	TESI	TES (Track error sense) comparator input pin. TE signal is band-passed and input.
9	SCI	Input pin for shock detection.
10	TH	Pin to set time constant of tracking gain.
11*	TA	TA amplifier output pin.
12	TD-	Pin to compose tracking phase compensation constant between TD and VR pins.
13	TD	Pin to set tracking phase compensation.
14	JP	Pin to set amplitude of tracking jump signal (kick pulse).
15	TO	Tracking control signal output pin.
16	FD	Focusing control signal output pin.
17	FD-	Pin to compose focusing phase compensation constant between FD and FA pins.
18	FA	Pin to compose focusing phase compensation constant between FD-/FA-pins.
19	FA-	Pin to compose focusing phase compensation constant between FA and FE pins.
20	FE	Output pin of FE signal.
21	FE-	Pin to connect gain setting resistor of FE signal across TE pin.
22	AGND	GND for analog signal.
23	NC	No connect.
24	SPI	Spindle amplifier input.
25	SPG	Pin to connect gain setting resistor in the 12cm mode of spindle.
26	SP-	Pin to connect spindle phase compensation constant together with SPD pin.
27	SPD	Spindle control signal output pin.
28	SLEQ	Pin to connect thread phase compensation constant.
29	SLD	Thread control signal output pin.
30	SL-	Input pin of thread feed signal from micro computer.
31	SL+	Input pin of thread feed signal from micro computer.
32	JP-	Input pin of tracking jump signal from DSP.
33	JP+	Input pin of tracking jump signal from DSP.
34	TGL	Input pin of tracking gain control signal from DSP. TGL = Gain low at "H"
35	TOFF	Input pin of tracking off control signal from DSP. TOFF = Off at "H"
36	TES	Output pin of TES signal to DSP.
37	HFL	(HIGH FREQUENCY LEVEL) is used to judge whether main beam is positioned on the bit or on the mirror.
38	SLOF	Thread servo off control input pin.
39	CV-	Pin to input CLV error signal from DSP.
40	CV+	Pin to input CLV error signal from DSP.
41	RFSM	RF output pin.
42	RFS-	Pin to set gain of RF and set 3T compensation constant together with RFSM pin.
43	SLC	(SLICE LEVEL CONTROL) is the output pin to control of the level of the data slice with RF waveform DSP.
44	SLI	Input pin to control the level of data slice with DSP.
45	DGND	GND pin in the digital system.
46	FSC	Output pin for focus search smoothening capacitor.
47	TBC	(Tracking Balance Control) Pin to set EF balance variable range.
48*	NC	No connect.
49	DEF	Defect detection output pin of disk.
50	CLK	Reference clock input pin. 4.23MHz of DSP is input.

In this unit, the terminal with asterisk mark (*) is (open) terminal which is not connected to the outside.

IC1 VHiLA9241M/-1:Servo Amp.(LA9241M) (2/2)

Pin No.	Port Name	Function
51	CL	Micro computer command clock input pin.
52	DAT	Micro computer command data input pin.
53	CE	Micro computer command chip enable input pin.
54	DRF	(DETECT RF) RF level detection output.
55	FSS	(Focus Serch Select) Pin to switch focus search mode. (± search/+ search for reference voltage)
56	VCC2	VCC pin for servo system and digital system.
57	REFI	Pin to connect pass control for reference voltage.
58	VR	Reference voltage output pin.
59	LF2	Pin to set defect detection time constant of disk.
60	PH1	Pin to connect capacitor for peak hold of RF signal.
61	BH1	Pin to connect capacitor for bottom hold of RF signal.
62	LDD	APC circuit output pin.
63	LDS	APC circuit output pin.
64	VCC1	RF system VCC pin.

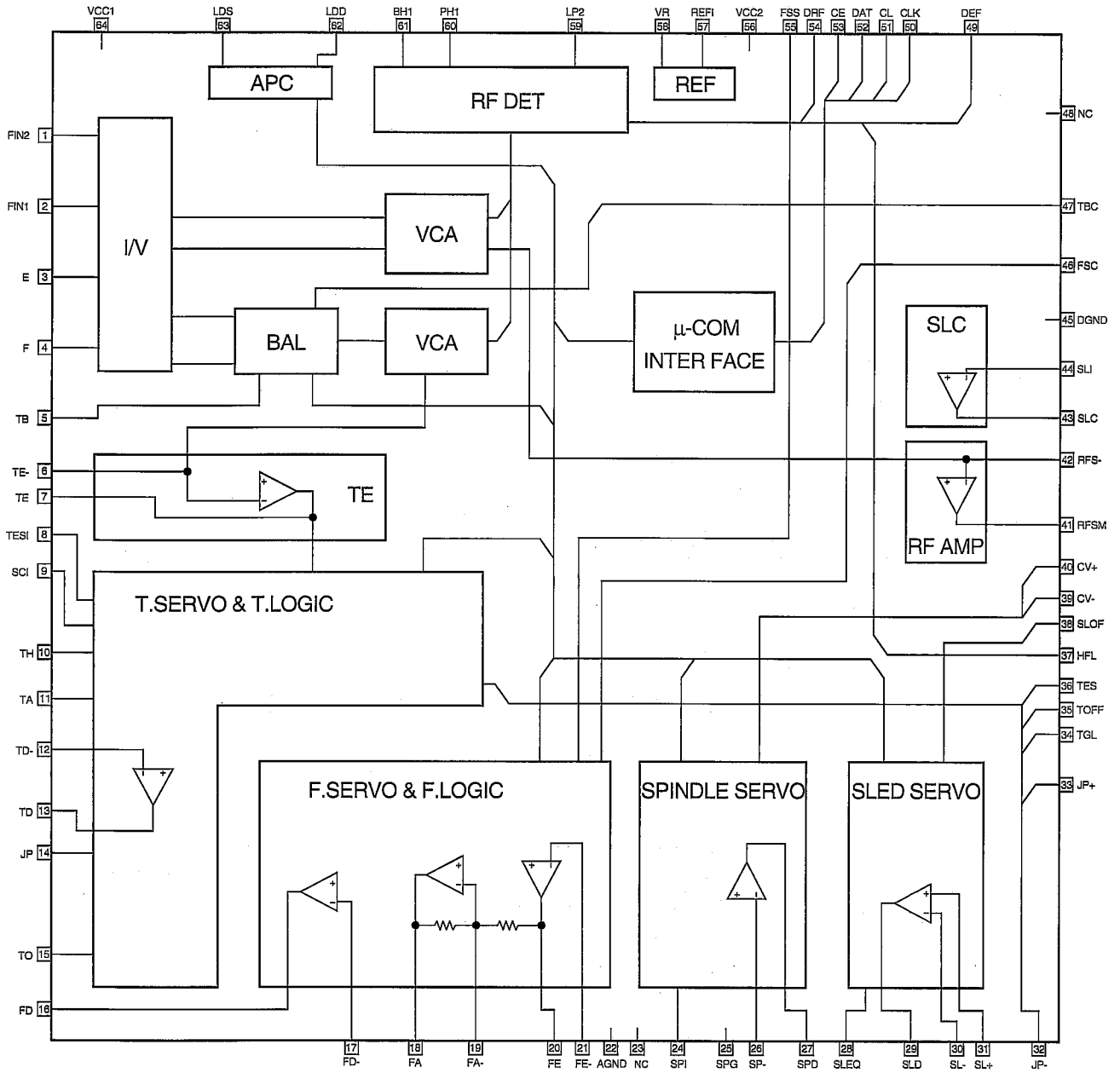

Figure 54 BLOCK DIAGRAM OF IC

IC2 VHiLC78622N-1: Servo/Signal Control (LC78622NE) (1/2)

Pin No.	Terminal Name	Input/Output	Function	
1	DEFI	Input	Defect detection signal (DFF) input terminal. (When this terminal is not used, connect it to 0V.)	
2	TAI	Input	For PLL	Input terminal for test. Pull-down resistor built in. Be sure to connect this terminal to 0V.
3	PDO	Output		Phase comparison output terminal for external VCO control.
4	VVSS	—		Grounding terminal for built-in VCO. Be sure to connect this terminal to 0V.
5	ISET	Input		Resistor connection terminal for adjustment of PDO output current.
6	VVDD	—		Power terminal for built-in VCO.
7	FR	Input		For VCO frequency range adjustment.
8	VSS	—	Digital system grounding terminal. Be sure to connect this terminal to 0V.	
9	EFMO	Output	For slice level control	EFM signal output terminal.
10	EFMIN	Input		EFM signal input terminal.
11	TEST2	Input	Input terminal for test. Pull-down resistor built-in. Be sure to connect this terminal to 0V.	
12	CLV+	Outout	Output for disc motor control. 3-value output is enabled according to command.	
13	CLV-	Output	Output for disc motor control. 3-value output is enabled according to command.	
14	V/$\overline{P}$	Output	Rough servo/phase control automatic selection monitor output terminal. "H": Rough servo, "L": Phase servo	
15	HLF	Intput	Track detection signal input terminal. Schmidt input.	
16	TES	Input	Tracking error signal input terminal. Schmidt input.	
17	TOFF	Output	Tracking OFF output terminal.	
18	TGL	Output	Output terminal for tracking gain selection. "L": Gain raising.	
19	JP+	Output	Output for track jump control. 3-value output is enabled according to command.	
20	JP-	Output	Output for track jump control. 3-value output is enabled according to command.	
21*	PCK	Output	Clock monitor terminal for EFM data play-back. Phase lock: 4.3218 MHz.	
22*	FSEQ	Output	Sync signal detection output terminal. When the sync signal detected from the EFM signal coincides with the internally generated sync signal: "H"	
23	VDD	—	Digital system power terminal.	
24	CONT1	Input/Output	General-use input/output terminal 1.	Control with serial data command from microcomputer. When this terminal is not used, set it as an input terminal and connect to 0V or set it as an output terminal and open.
25	CONT2	Input/Output	General-use input/output terminal 2.	
26	CONT3	Input/Output	General-use input/output terminal 3.	
27	CONT4	Input/Output	General-use input/output terminal 4.	
28*	CONT5	Input/Output	General-use input/output terminal 5.	
29*	EMPH/CONT6	Output	Deemphasis monitor terminal. "H": Deemphasis disc play-back. General-use output terminal 6.	
30*	C2F	Output	C2 flag output terminal.	
31	DOUT	Output	Digital OUT output terminal. (EIAJ format)	
32*	TEST3	Input	Input terminal for test. Pull-down resistor built-in. Be sure to connect this terminal to 0V.	
33	TEST4	Input	Input terminal for test. Pull-down resistor built-in. Be sure to connect this terminal to 0V.	
34	PCCL	Input	General-use input/output command recognition terminal. Pull-down resistor built in. When this terminal is used for the same function as that of LC78622E, open or connect this terminal to 0V. H: Only the general-use input/output port command is controllable. L: All command controls are enabled.	
35*	MUTEL/CONT7	Output	L channel 1-bit DAC	Mute output terminal for L channel. General-use output terminal 7.
36	LVDD	—		Power terminal for L channel.
37	LCHO	Output		L channel output terminal.
38	LVSS	—		Grounding terminal for L channel. Be sure to connect this terminal to 0V.
39	RVSS	—	R channel 1-bit DAC	Grounding terminal for R channel. Be sure to connect this terminal to 0V.
40	RCHO	Output		R channel output terminal.
41	RVDD	—		Power terminal for R channel.
42*	MUTER/CONT8	Output		Mute output terminal for R channel. General-use output terminal 8.
43	XVDD	—	Power terminal for crystal oscillation.	
44	XOUT	Output	16.9344 MHz crystal oscillator connection terminal.	
45	XIN	Input	16.9344 MHz crystal oscillator connection terminal.	
46	XVSS	—	Grounding terminal for crystal oscillation. Be sure to connect this terminal to 0V.	

In this unit, the terminal with asterisk mark (*) is (open) terminal which is not connected to the outside.

IC2 VHiLC78622N-1: Servo/Signal Control (LC78622NE) (2/2)

Pin No.	Terminal Name	Input/Output	Function
47*	SBSY	Output	Sub-code clock sync signal output terminal.
48*	EFLG	Output	C1, C2, single, double correction monitor terminal.
49*	PW	Output	Sub-code P, Q, R, S, T, U, and W output terminal.
50*	SFSY	Output	Sub-code frame sync signal output terminal. Falling occurs when the sub-code is in standby state.
51	SBCK	Input	Sub-code read clock input terminal. Schmidt input (When this terminal is not used, connect it to 0V.)
52*	FSX	Output	7.35 kHz sync signal (frequency-divided from crystal oscillation) output terminal.
53	WRQ	Output	Sub-code Q output standby output terminal.
54	RWC	Input	Read/Write control input terminal. Schmidt input.
55	SQOUT	Output	Sub-code Q output terminal.
56	COIN	Input	Command input terminal from microcomputer.
57	$\overline{CQCK}$	Input	Command input taking-in clock or sub-code taking-out (from SQOUT) clock input terminal. Schmidt input
58	$\overline{RES}$	Input	LSI resetting input terminal. When power is turned on, once "L" is set.
59*	TEST11	Output	Output terminal for test. Use this terminal in open state (usually "L" output).
60*	16M	Output	16.9344 MHz output terminal.
61	4.2M	Output	4.2336 MHz output terminal.
62	TEST5	Input	Input terminal for test. Pull-down resistor built-in. Be sure to connect this terminal to 0V.
63	$\overline{CS}$	Input	Chip selection input terminal. Pull-down resistor built-in. In noncontrol state connect this terminal to 0V.
64	TEST1	Input	Input terminal for test. Pull-down resistor is not provided. Be sure to connect this terminal to 0V.

Note: The same potential must be supplied to the power terminals (VDD, VVDD, LVDD, RVDD, XVDD).

In this unit, the terminal with asterisk mark (*) is (open) terminal which is not connected to the outside.

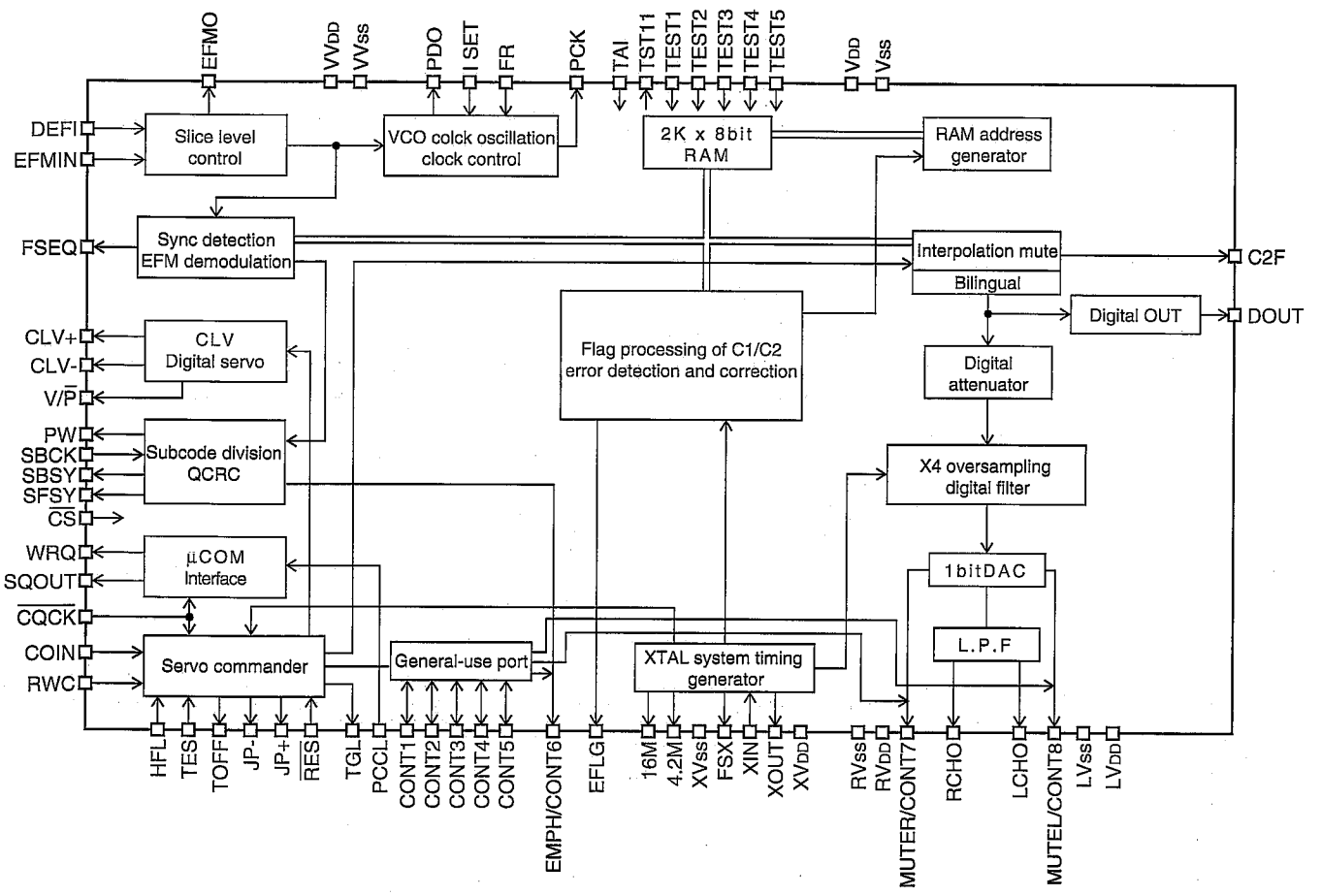

Figure 56 BLOCK DIAGRAM OF IC

IC3 VHiM63001FP-1: Focus/Tracking/Spin/Slide Driver (M63001FP)

Pin No.	Terminal Name	Function
1	IN2-	CH2 inverted input.
2	IN1A-	CH1 inverted input.
3	IN1B-	CH1 output offset control.
4	OUT1-	CH1 inverted output.
5	OUT1+	CH1 non-inverted output.
6	OUT2-	CH2 inverted output.
7	OUT2+	CH2 non-inverted output.
8-14	GND	GND
15	OUT3+	CH3 non-inverted output.
16	OUT3-	CH3 inverted output.
17	IN3-	CH3 inverted input.
18	VCC1	Power supply 1 (CH1, CH2, CH3)
19	STANDBY	STANDBY signal input.
20	VRFE	CH1-CH4 Reference voltage input.
21	MUTE	Mute signal input (CH6).
22	IN5-	CH5 inverted input.
23	IN5+	CH5 non-inverted input.
24	VCC2	Power supply 2 (CH4).
25	IN4-	CH4 inverted input.
26	OUT4-	CH4 inverted output.
27	OUT4+	CH4 non-inverted output.
28	VCC3	Power supply 3 (CH5).
29-35	GND	GND
36	OUT5+	CH5 non-inverted output.
37	OUT5-	CH5 inverted output.
38	OUT6+	CH6 non-inverted output.
39	OUT6-	CH6 inverted output.
40	VCC4	Power supply 4 (CH6).
41	IN6-	CH6 inverted input.
42	IN6+	CH6 non-inverted input.

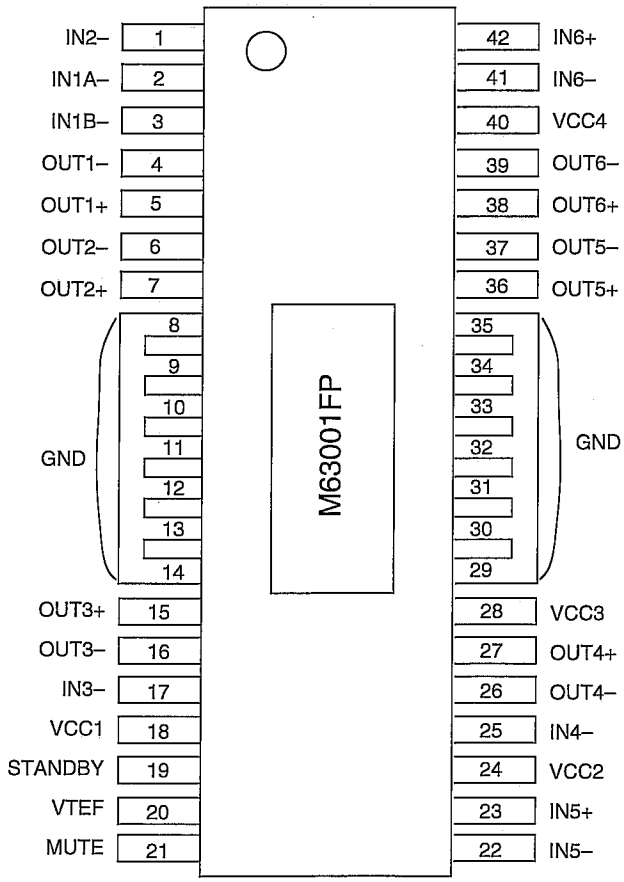

IC650,651 VHiKiA4558P-1: Ope Amp. (KIA4558P)

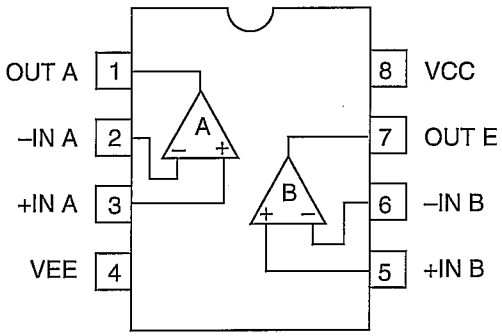

Figure 57 BLOCK DIAGRAM OF IC

IC701 RH-iX0281AWZZ:System Control Microcomputer (IX0281AW) (1/2)

Pin No.	Port Name	Terminal Name	Input/Output	Function
1	VDD	VDD	—	(+) POWER SUPPLY
2	P37	ENA	Output	DOLBY PROLOGIC ENABLE TERMINAL
3	P36	DO	Input	DATA INPUT
4	P35	DI	Output	DATA OUTPUT
5	P34	CE	Output	CE OUTPUT
6	P33	CLK	Output	CLOCK OUTPUT
7,8	P32, P31	LCK1, LCK2	Output	
9	P30	RWC	Output	CD DSP READ WRITE CONTROL
10	RESET	RESET	Input	RESET
11	X2	X2	Output	MAIN CLOCK
12	X1	X1	Input	MAIN CLOCK
13	Vpp	VPP	—	POWER SUPPLY TERMINAL
14*	XT2	XT2	—	OPEN
15	P04	WRQ	Input	CD DSP WRITE REQUEST
16	VDD	VDD	—	(+) POWER SUPPLY
17	P27	PCCL	Output	CD DSP PCCL
18	P26	COIN	Outout	CD DSP COMAND
19	P25	SQOUT	Input	CD DSP CODE Q OUT
20	P24	CQCK	Output	CD DSP CLOCK
21	P23	DSP RES	Output	CD DSP RESET
22	P22	FRF (DRF)	Input	CD RF LEVEL DETECTION
23	P21	SLD+	Output	CD SLIDE MOTOR +
24	P20	SLD-	Output	CD SLIDE MOTOR -
25	AVss	AVSS	—	ANALOG GROUND
26	ANI7	SPEANA3	Input	SPEANA DATA INPUT 16 KHz
27	ANI6	SPEANA2	Input	SPEANA DATA INPUT 1 KHz
28	ANI5	SPEANA1	Input	SPEANA DATA INPUT 63 Hz
29	ANI4	TUN SM	Input	TUNER SIGNAL METER INPUT
30	ANI3	T2 RUN	Input	TAPE2 RUN PULSE INPUT
31-33	ANI2-ANI0	KEYIN3-KEYIN1	Input	KEY INPUT
34	AVDD	AVDD	—	ANALOG VDD
35	AVREF	AVREF	—	ANALOG REF VOLTAGE
36	P03	PUIN SW	Input	CD PUIN SWITCH
37	P02	O/C SW	Input	CD OPEN/CLOSE SWITCH
38	INTP1	SYS STOP	Input	SYSTEM STOP INPUT
39	INTP0	REMOCON	Input	REMOCON INPUT
40	Vss	VSS	—	GROUND VOLTAGE
41	P74	DNO SW	Input	CD DISC NO. SWITCH
42	P73	U/D SW	Input	CD UP/DOWN SWITCH
43	P72	TIMER LED	Output	TIMER LED CONTROL
44	P71	T_SOL	Output	TAPE SOLENOID CONTROL
45	P70	T_MOT	Output	TAPE MOTOR CONTROL
46	VDD	VDD	—	(+) POWER SUPPLY
47	P127	CAM SW	Input	TAPE CAM SWITCH
48	P126	TIFAS	Input	TAPE1 FULL AUTOSTOP PULSE INPUT
49	P125	FPA	Input	TAPE2 A-SIDE FULL PROOF
50	P124	H/P	Input	HEADPHONE INPUT
51	P123	AC RLY_CONT	Output	AC RELAY CONTROL
52	P122	REC/PLAY	Output	TAPE REC/PLAY CHANGE
53	P121	T_BIAS	Output	TAPE Record bias control
54	P120	T_T1T2	Output	TAPE T1/T2 CHANGE
55	P117	DISTO	Input	DISTINATION INPUT

In this unit, the terminal with asterisk mark (*) is (open) terminal which is not connected to the outside.

IC701 RH-iX0281AWZZ:System Control Microcomputer (IX0281AW) (2/2)

Pin No.	Port Name	Terminal Name	Input/Output	Function
56	P116	KEY JOG A	Input	KEY JOG INPUT A
57	P115	KEY JOG B	Input	KEY JOG INPUT B
58	P114	S MUTE	Output	SYSTEM MUTE
59	P113	C MUTE	Output	CENTER MUTE
60	P112	SR MUTE	Output	SURROUND MUTE
61*	P111	HI-CUT	Output	HI-CUT OUTPUT
62	P110	POWER	Output	POWER OUTPUT
63	P107	SPRLY	Output	SPEAKER OUTPUT RELAY CONTROL
64	P106	SP_DET	Input	SPEAKER OUTPUT DETECTION
65	P105	SPN_P	Input	TUNER SPAN CHANGE
66	P104	DISTOUT	Output	DISTINATION OUTPUT
67	P103/FIP32	DIAT4/P22	Input/Output	FL DISPLAY SEGMENT DRIVER DISTINATION INPUT
68	P102/FIP31	DIAT3/P21	Input/Output	FL DISPLAY SEGMENT DRIVER DISTINATION INPUT
69	P101/FIP30	DIAT2/P20/P15	Input/Output	FL DISPLAY SEGMENT DRIVER DISTINATION INPUT
70	P100/FIP29	DIAT1/P19/P16	Input/Output	FL DISPLAY SEGMENT DRIVER DISTINATION INPUT
71-78	FIP28-FIP21	P18/P13-P11/P7	Output	FL DISPLAY SEGMENT DRIVER
79	VLOAD	VLOAD	—	FL DRIVER (–) POWER SUPP, –30V
80-100	FIP20-FIP0	P10/P6-G1/9G	Output	FL DISPLAY SEGMENT DRIVER

In this unit, the terminal with asterisk mark (*) is (open) terminal which is not connected to the outside.

FL701 VVKBJ685GNK-1: FL Display

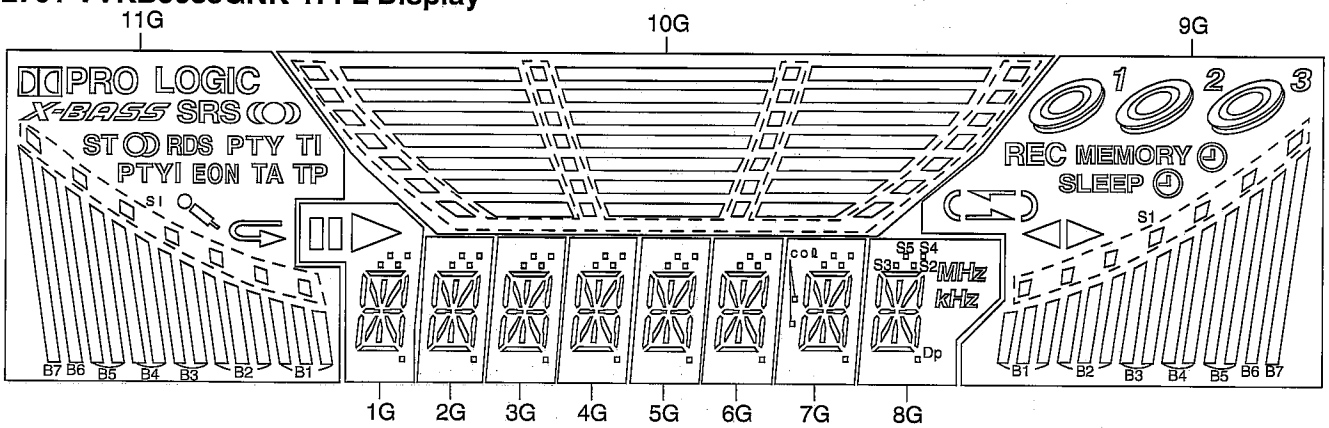

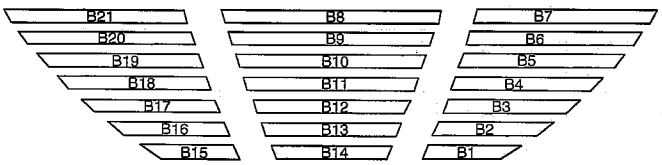

[10G]

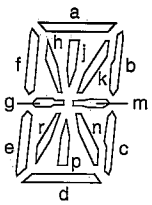

[1G~8G]

ANODE CONNECTION

	1G	2G~6G	7G	8G	9G	10G	11G
P1	Dp	Dp	Dp	Dp	S1	S1	S1
P2	d	d	d	d	B1	B1	B1
P3	c	c	c	c	B2	B2	B2
P4	n	n	n	n	B3	B3	B3
P5	p	p	p	p	B4	B4	B4
P6	r	r	r	r	B5	B5	B5
P7	e	e	e	e	B6	B6	B6
P8	m	m	m	m	B7	B7	B7
P9	g	g	g	g	1	B8	PRO LOGIC
P10	–	–	col	–	2	B9	X-BASS
P11	b	b	b	b	3	B10	SRS
P12	k	k	k	k	REC	B11	ST
P13	j	j	j	j	MEMORY	B12	
P14	h	h	h	h		B13	RDS
P15	f	f	f	f	(LOWER)	B14	PTY
P16	a	a	a	a	SLEEP	B15	TI
P17	S2	S2	S2	S2		B16	TP
P18	S3	S3	S3	S3		B17	TA
P19	S4	S4	S4	S4		B18	PTYI
P20	S5	S5	S5	S5		B19	EON
P21		–	–	MHz		B20	
P22		–	–	kHz	–	B21	

Figure 60 FL DISPLAY

WIRING OF PRIMARILY SUPPLY LEADS (FOR U.K. ONLY)

If any one of the bands shown in Fig. 61 is removed some reason, be sure replace it to the original position and same appearance as before.

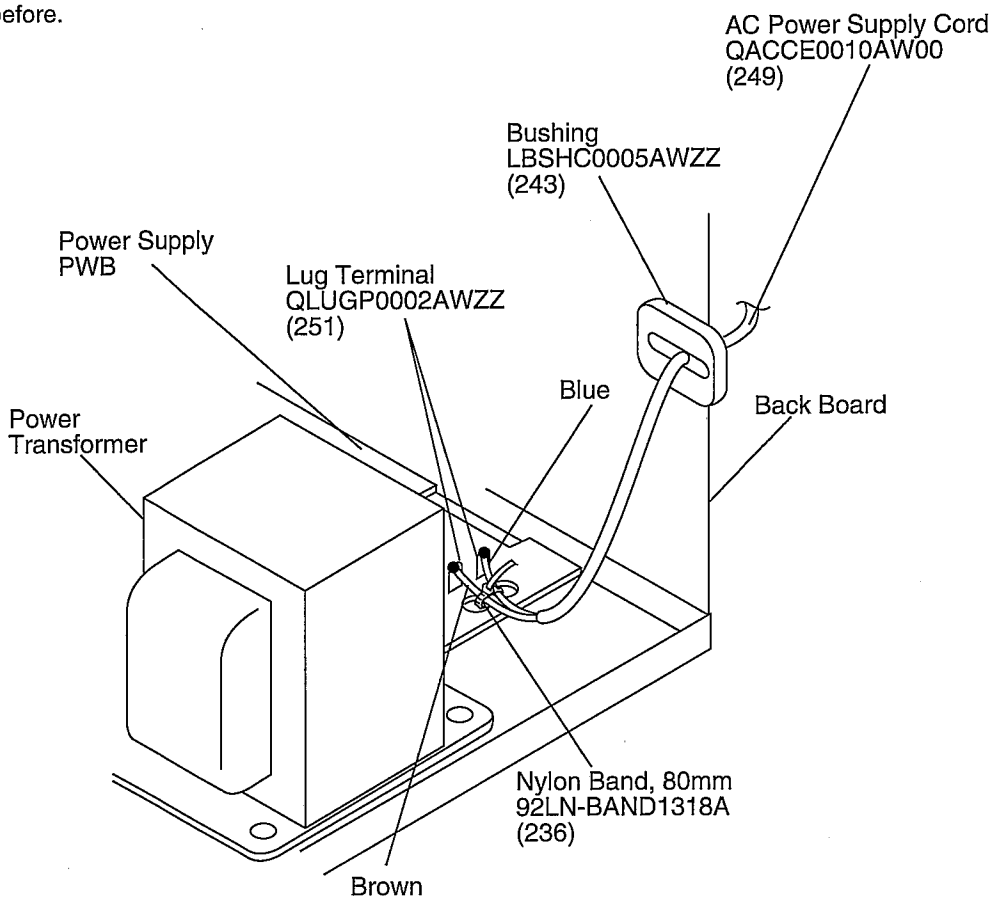

Figure 61

— MEMO —

SHARP PARTS GUIDE

MODEL CD-PC671H

CD-PC671H mini component system consisting of CD-PC671H (main unit), CP-C671H (front speakers),CP-SW671H (sub woofer), GBOXS0026AWM1 (center speaker) and GBOXS0027AWM1 (rear speaker).

MODEL CD-PC651H

CD-PC651H mini component system consisting of CD-PC651H (main unit), CP-C651H (front speakers), GBOXS0026AWM1 (center speaker) and GBOXS0027AWM1 (rear speaker).

"HOW TO ORDER REPLACEMENT PARTS"

To have your order filled promptly and correctly, please furnish the following information.

1. MODEL NUMBER
2. REF. No.
3. PART NO.
4. DESCRIPTION

★ MARK: SPARE PARTS-DELIVERY SECTION

For U.S.A. only

Contact your nearest SHARP. Parts Distributor to order.

For location of SHARP Parts Distributor,
Please call Toll-Free;
1-800-BE-SHARP

Explanation of capacitors/resistors parts codes

Capacitors

VCC ..... Ceramic type
VCK..... Ceramic type
VCT..... Semiconductor type
VC • • MF ..... Cylindrical type (without lead wire)
VC • • MN..... Cylindrical type (without lead wire)
VC • • TV..... Square type (without lead wire)
VC • • TQ ..... Square type (without lead wire)
VC • • CY ..... Square type (without lead wire)
VC • • CZ ..... Square type (without lead wire)
VC • • • • • • • • • J .. The 13th character represents capacity difference.
("J" ±5%, "K" ±10%, "M" ±20%, "N" ±30%,
"C" ±0.25 pF, "D" ±0.5 pF, "Z" +80-20%.)

If there are no indications for the electrolytic capacitors, error is ±20%.

Resistors

VRD ..... Carbon-film type
VRS..... Carbon-film type
VRN ..... Metal-film type
VR • • MF ..... Cylindrical type (without lead wire)
VR • • MN..... Cylindrical type (without lead wire)
VR • • TV..... Square type (without lead wire)
VR • • TQ ..... Square type (without lead wire)
VR • • CY ..... Square type (without lead wire)
VR • • CZ ..... Square type (without lead wire)
VR • • • • • • • • • J .. The 13th character represents error.
("J" ±5%, "F" ±1%, "D" ±0.5%.)

If there are no indications for other parts, the resistors are ±5% carbon-film type.

NOTE:
Parts marked with "⚠" are important for maintaining the safety of the set.
Be sure to replace parts with specified ones for maintaining the safety and performance of the set.

SHARP

CD Stereo : CD-PC651H/PC671H/PC672

Date : Jun. 28, 1999

No. : EAA-935

Technical Report

Title

Ⓔ Improvement of headphones' distortion
Ⓓ Verbesserung der Verzerrung des Kopfhörers
Ⓕ Mesure contre la distorsion du son dans le casque

Model

MODEL	SERIAL No. (NEW)	QUANTITY (OLD)	ITEM
CD-PC651H CD-PC671H	----------	----------	1~5
CD-PC672	----------	----------	1~5

General

Ⓔ Since the sound through headphones is distorted when the volume level is low, it has been improved.
Ⓓ Da der Ton bei niedrigem Lautstärkepegel verzerrt wird, wird es verbessert.
Ⓕ Il s'agit d'une mesure prise contre la distorsion qui se produit à un faible niveau sonore.

Refer to

Ⓔ Service Manual Ⓓ Service Anleitung Ⓕ Manuel de Service

Parts

ITEM	REF.No.	DESCRIPTION	PARTS CODE				INTER-CHANGE-ABILITY	EFFEC-TIVE FROM	PRICE RANK
			Current parts	Q'ty	New parts	Q'ty			
1	C601 C602	1µF,50V,Electrolytic	VCQYKA1HM473K	2	VCEAZA1HW105M	2	A	Jun. '99	AB
2	R605,R606 R624	1kohm,1/8W	VRD-MN2BD223J	3	VRD-MN2BD102J	3	A	Jun. '99	AA
3	R609	5.6kohms,1/8W	VRD-MN2BD104J	1	VRD-MN2BD562J	1	A	Jun. '99	AA
4	R610	5.6kohms,1/6W	VRD-ST2CD104J	1	VRD-ST2CD562J	1	A	Jun. '99	AA
5	R623	1kohm,1/6W	VRD-ST2CD223J	1	VRD-ST2CD102J	1	A	Jun. '99	AA

<Interchange>	
A: Interchangeable.	D: Not interchangeable.
B: Current type can be used in place of new type. New type cannot be used in place of current type.	E: Interchangeable if replaced with same types of related parts in use.
C: Current type cannot be used in place of new type. New type can be used in place of current type.	F: Others.

Figure 23 schematic diagram(4/12)[CD-PC672]

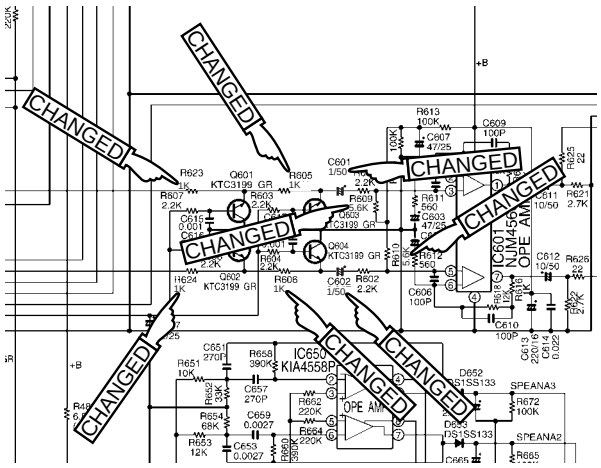

Blue
C

SHARP CORPORATION Audio-Visual Systems Group Q.R.C.C

SC•SL•SK•SG

SHARP

CD Stereo : CD-C612/C621H/C622/C662/C831W/C2900
CD-PC651H/PC671H/PC672/PC871W/PC881W

Date : Sep. 30, 1999

No. : EAA-953

Technical Report

Title

Correction of Service Manual

Model

MODEL	SERIAL No. (NEW)	QUANTITY (OLD)	ITEM
CD-C612	----------	----------	1,2
CD-C621H	----------	----------	1,2
CD-C622/C2900	----------	----------	1,2
CD-C662	----------	----------	1,2
CD-C831W	----------	----------	1,2
CD-PC671H/PC651H	----------	----------	1,2
CD-PC672	----------	----------	1,2
CD-PC881W/PC871W	----------	----------	1,2

General

We inform you that there is a printing error in the parts list of Service Manual as follows.
• Please order or supply parts using the part codes which have correct numbers.

Refer to

Service Manual

Parts

ITEM	REF.No.	DESCRIPTION	PARTS CODE				INTER-CHANGE-ABILITY	EFFEC-TIVE FROM	PRICE RANK
			WRONG	Q'ty	CORRECT	Q'ty			
1	303	Rail, Guide	MLEVP0010AWZZ	1	MLEVP0080AWZZ	1	F	-----	AC
2	M1	Motor with Chassis [Spindle]	92LMTR1858CASY	1	92LMTR2790CASY	1	F	-----	BB

<Interchange>	
A: Interchangeable.	D: Not interchangeable.
B: Current type can be used in place of new type. New type cannot be used in place of current type.	E: Interchangeable if replaced with same types of related parts in use.
C: Current type cannot be used in place of new type. New type can be used in place of current type.	F: Others.

Blue
C

SHARP CORPORATION Audio-Visual Systems Group Q.R.C.C

SHARP

CD Stereo : CD-PC671H/651H

Date : Nov. 15, 2000

No. : EAA-1026

Technical Report

Title

Correction of Service Manual

Model

MODEL	SERIAL No. (NEW)	QUANTITY (OLD)	ITEM
CD-PC671H/ CD-PC651H	----------	----------	1

General

We inform you that there is a printing error in the parts list of Service Manual as follows.
• Please order or supply parts using the part codes which have correct numbers.

Refer to

Service Manual

Parts

ITEM	REF.No.	DESCRIPTION	PARTS CODE				INTER-CHANGE-ABILITY	EFFEC-TIVE FROM	PRICE RANK
			WRONG	Q'ty	CORRECT	Q'ty			
1	905	Label, Parts Code	92L33-01-0960	1	92L33-01-0940	1	F	-----	AC

<Interchange>	
A: Interchangeable.	D: Not interchangeable.
B: Current type can be used in place of new type. New type cannot be used in place of current type.	E: Interchangeable if replaced with same types of related parts in use.
C: Current type cannot be used in place of new type. New type can be used in place of current type.	F: Others.

Blue
C

SHARP CORPORATION Audio-Visual Systems Group Q.R.C.C

WRONG

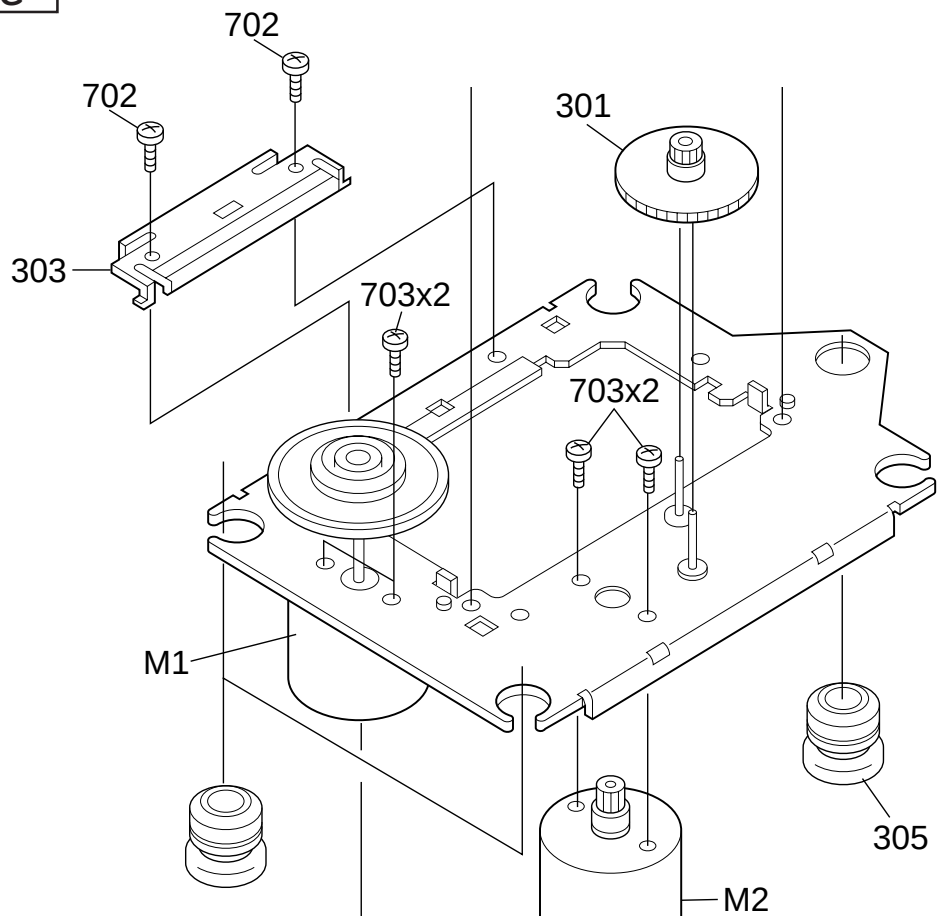

CORRECT

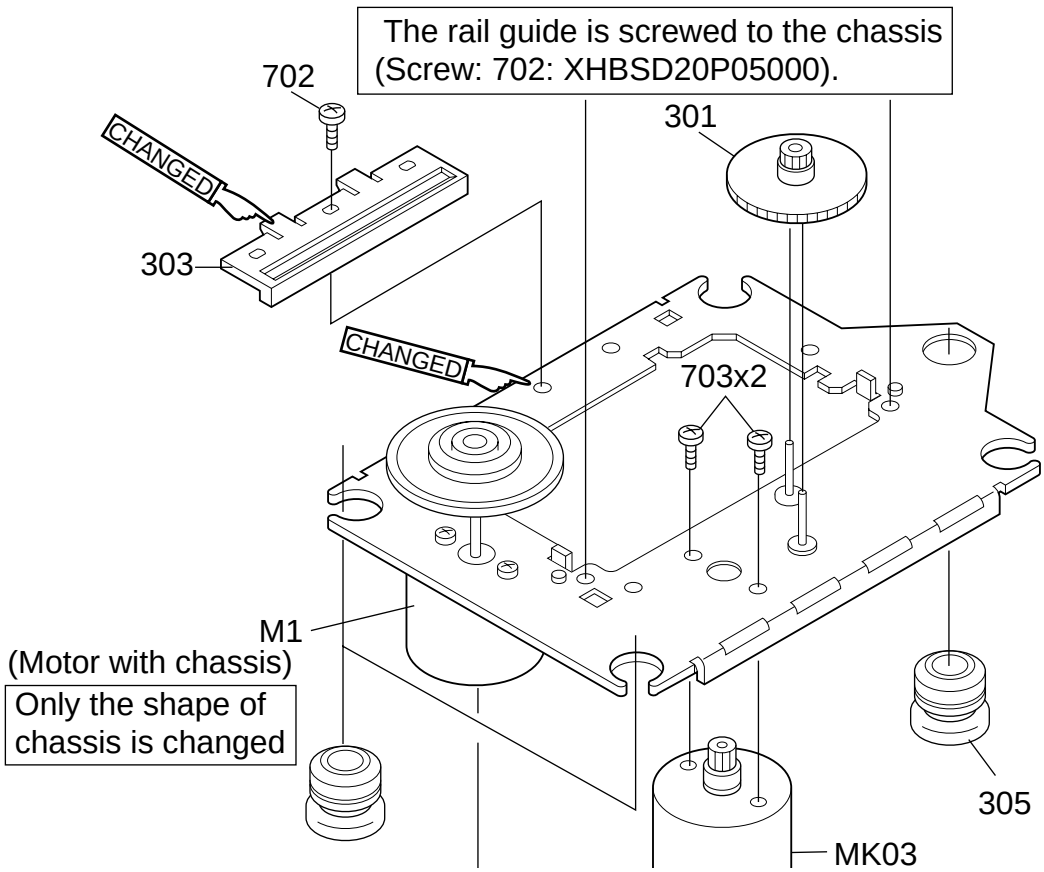

CD-PC671H/651H

NO.	PARTS CODE	★	PRICE RANK	DESCRIPTION
CD-PC671H/651H				
INTEGRATED CIRCUITS				
IC1	VHILA9241M/-1	J	AS	Servo Amp.,LA9241M
IC2	VHILC78622N-1	J	AY	Servo/Signal Control,LC78622NE
IC3	VHIM63001FP-1	J	AX	Focus/Trackig/Spin/Slide Driver, M63001FP
IC101	VHIAN7345K/-1	J	AM	Playback and Record/Playback Amp.,AN7345K
IC302	VHILC72131/-1	J	AP	PLL (Tuner),LC72131
IC303	VHILA1832//-1	J	AR	FM/AM IF MPX.,LA1832
IC401	VHILC75396N-1	J	AX	Audio Processor,LC75396N
IC471	VHIKIA4558P-1	J	AC	Ope Amp.,KIA4558P [PC671H Only]
IC501	VHILV1035M/-1	J	BC	Dolby Pro Logic Decorder, LV1035M
IC601	VHINJM4560D-1	J	AH	Ope Amp.,NJM4560D
IC650,651	VHIKIA4558P-1	J	AC	Ope Amp.,KIA4558P
IC701	RH-IX0281AWZZ	J	AZ	System Control Microcomputer, IX0281AW
IC702,703	VHIBU2092F/-1	J	AM	Input/Output Expander,BU2092F
IC704	VHIKIA7042AP1	J	AC	Reset,KIA7042AP
IC803	VHIAN78L05/-1	J	AE	Constant Voltage Regulator, AN78L05
IC804	VHIKIA7812P-1	J	AE	Voltage Regulator,KIA7812P [PC671H Only]
IC805	VHIKIA7806P-1	J	AG	Voltage Regulator,KIA7806P [PC671H Only]
IC806	VHIAN78L05/-1	J	AE	Constant Voltage Regulator, AN78L05
IC901	VHISTK40704-1	J	AZ	Power Amp.,STK40704 [PC651H]
IC901	VHISTK40724-1	J	BD	Power Amp.,STK40724 [PC671H]
IC951	VHILA4451//-1	J	AN	Power Amp.,LA4451 [PC671H Only]
ICT21	VHILC72720/-1	J	AW	RDS Decorder,LC72720
TRANSISTORS				
Q1	VS2SA1318//-1	J	AC	Silicon,PNP,2SA1318
Q51	VSKRC102M//-1	J	AC	Digital,NPN,KRC102 M
Q52	VSKTC3203Y/-1	J	AC	Silicon,NPN,KTC3203 Y
Q103~106	VS2SC2389SE-1	J	AD	Silicon,NPN,2SC2389 SE
Q107,108	VSKTC3199GR-1	J	AB	Silicon,NPN,KTC3199 GR
Q109	VSKTA1266GR-1	J	AB	Silicon,PNP,KTA1266 GR
Q110,111	VSKRC104M//-1	J	AC	Digital,NPN,KRC104 M
Q121,122	VSKTC3199GR-1	J	AB	Silicon,NPN,KTC3199 GR
Q124	VSKTA1266GR-1	J	AB	Silicon,PNP,KTA1266 GR
Q126	VSKRC104M//-1	J	AC	Digital,NPN,KRC104 M
Q128	VSKTC3203Y/-1	J	AC	Silicon,NPN,KTC3203 Y
Q301	VS2SC380-O/-1	J	AC	Silicon,NPN,2SC380 O
Q353,354	VSKTC3199GR-1	J	AB	Silicon,NPN,KTC3199 GR
Q360	VSKTA1266GR-1	J	AB	Silicon,PNP,KTA1266 GR
Q361	VSKRC107M//-1	J	AC	Digital,NPN,KRC107 M
Q371	VSKTA1266GR-1	J	AB	Silicon,PNP,KTA1266 GR
Q401~404	VSKTC3199GR-1	J	AB	Silicon,NPN,KTC3199 GR
Q405	VSKRC104M//-1	J	AC	Digital,NPN,KRC104 M
Q601~604	VSKTC3199GR-1	J	AB	Silicon,NPN,KTC3199 GR
Q702	VSKTA1273Y/-1	J	AE	Silicon,PNP,KTA1273 Y
Q703	VSKTA1271Y/-1	J	AC	Silicon,PNP,KTA1271 Y
Q704	VSKRC102M//-1	J	AC	Digital,NPN,KRC102 M
Q705~707	VSKTC3199GR-1	J	AB	Silicon,NPN,KTC3199 GR
Q801	VSKTA1274Y/-1	J	AE	Silicon,PNP,KTA1274 Y
Q802	VSKRC107M//-1	J	AC	Digital,NPN,KRC107 M
Q903	VSKRC107M//-1	J	AC	Digital,NPN,KRC107 M
Q904	VSKTC3199GR-1	J	AB	Silicon,NPN,KTC3199 GR [PC671H Only]
Q905	VSKTC3199GR-1	J	AB	Silicon,NPN,KTC3199 GR
Q906	VSKRC107M//-1	J	AC	Digital,NPN,KRC107 M
Q907	VSKRC107M//-1	J	AC	Digital,NPN,KRC107 M [PC671H Only]
Q908	VSKTC3199GR-1	J	AB	Silicon,NPN,KTC3199 GR
QT21	VSKTC3199GR-1	J	AB	Silicon,NPN,KTC3199 GR
DIODES				
D1	VHD1SS133//-1	J	AA	Silicon,1SS133
D81,82	VHD1SS133//-1	J	AA	Silicon,1SS133
D91~93	VHD1SS133//-1	J	AA	Silicon,1SS133
D101,102	VHDDS1SS133-1	J	AB	Silicon,DS1SS133
D301~304	VHDDS1SS133-1	J	AB	Silicon,DS1SS133
D351~353	VHDDS1SS133-1	J	AB	Silicon,DS1SS133
D401~403	VHDDS1SS133-1	J	AB	Silicon,DS1SS133
D515,516	VHD1N4004S/-1	J	AB	Silicon,1N4004S
D651~654	VHDDS1SS133-1	J	AB	Silicon,DS1SS133
D702	VHDDS1SS133-1	J	AB	Silicon,DS1SS133 [PC651H Only]
D704	VHDDS1SS133-1	J	AB	Silicon,DS1SS133 [PC671H Only]
D715~722	VHDDS1SS133-1	J	AB	Silicon,DS1SS133
⚠D801,802	VHDTS6B04GM-1	J	AP	Silicon,TS6B04GM
D803~809	VHD1N4004S/-1	J	AB	Silicon,1N4004S
D810	VHDDS1SS133-1	J	AB	Silicon,DS1SS133
D811~814	VHD1N4004S/-1	J	AB	Silicon,1N4004S
D817~819	VHDDS1SS133-1	J	AB	Silicon,DS1SS133
D821~825	VHDDS1SS133-1	J	AB	Silicon,DS1SS133
D901	VHDDS1SS133-1	J	AB	Silicon,DS1SS133 [PC671H Only]
D902	VHD1SS133//-1	J	AA	Silicon,1SS133
D903	VHDDS1SS133-1	J	AB	Silicon,DS1SS133
D904~907	VHD1N4004S/-1	J	AB	Silicon,1N4004S
D908	VHDDS1SS133-1	J	AB	Silicon,DS1SS133
D909	VHDDS1SS133-1	J	AB	Silicon,DS1SS133 [PC671H Only]
LED701	VHPL1154GT4-1	J	AB	LED,Green,L1154GT4
LED702	VHPSLI342YCB1	J	AC	LED,Orange,SLI342YCB
LED703	VHPSLI342DCB1	J	AC	LED,Yellow,SLI342DCB
LED704	VHPSLI342UCB1	J	AC	LED,Red,SLI342UCB
LED705	VHPSLI342DCB1	J	AC	LED,Orange,SLI342UCB
LED706	VHPSLI342YCB1	J	AC	LED,Yellow,SLI342YCB
LED707	VHPL1154GT4-1	J	AB	LED,Green,L1154GT4
LED711~713	VHPSLI342YCJ1	J	AC	LED,Yellow,SLI342YCJ
LED716,717	VHPSLI342YCJ1	J	AC	LED,Yellow,SLI342YCJ
LED718	VHPSLI325YC-1	J	AB	LED,Yellow,SLI325YC [PC671H Only]
LED719,720	VHPSLI342YCE1	J	AC	LED,Yellow,SLI342YCE [PC671H Only]
LED721	VHPSLI342YCJ1	J	AC	LED,Yellow,SLI342YCJ [PC671H Only]
LED722	VHPSLI342UCJ1	J	AC	LED,Red,SLI342UCJ
LED723,724	VHPSLI342YCJ1	J	AC	LED,Yellow,SLI342YCJ [PC671H Only]
VD301	VHCSVC348S/-1	J	AK	Variable Capacitance,SVC348S
ZD61	VHEMTZJ5R6B-1	J	AD	Zener,5.6V,MTZJ5.6B
ZD351	VHEDZ5R1BSB-1	J	AC	Zener,DZ5R1BSB
ZD352	VHEDZ3R9BSB-1	J	AC	Zener,3.9V,DZ3.9BSB
ZD651	VHEDZ6R2BSC-1	J	AB	Zener,DZ6R2BSC
ZD801	VHEDZ6R2BSA-1	J	AB	Zener,DZ6R2BSA
ZD802	VHEDZ300BSB-1	J	AB	Zener,DZ300BSB
ZD803	VHEDZ130BSB-1	J	AB	Zener,DZ130BSB
ZDT21	VHEDZ5R1BSB-1	J	AC	Zener,5.1V,DZ5.1BSB
FILTERS				
CF301	RFILF0072AFZZ	J	AG	FM IF
CF302	RFILF0072AFZZ	J	AG	FM IF
CF351	RFILF0003AWZZ	J	AK	FM IF
CF352	RFILA0009AWZZ	J	AE	AM IF
TRANSFORMERS				
⚠PT801	RTRNP0249AWZZ	J	BH	Power
⚠PT802	RTRNP0239AWZZ	J	AP	Power
T302	RCILA1064AFZZ	J	AD	AM Tracking
T306	RCILB1074AFZZ	J	AC	AM,OSC
T351	RCILI0011AWZZ	J	AD	AM IF
COILS				
L99	VP-DH2R2K0000	J	AB	2.2 mmH,Peaking
L101	VP-XH2R2K0000	J	AB	2.2 μH,Choke
L102	VP-XH2R2K0000	J	AB	2.2 μH,Choke
L104	VP-MK331K0000	J	AB	330 μH,Choke
L341	RBLN-0001AWZZ	J	AD	Balun
L342	VP-DH2R2K0000	J	AB	2.2 mmH,Peaking
L351	VP-DH101K0000	J	AB	100 μH,Choke
L352	VP-DH101K0000	J	AB	100 μH,Choke
L353	VP-DH102K0000	J	AB	1 mH,Choke
L354	RFILL0001AWZZ	J	AE	Low Pass Filter
L601	VP-DH101K0000	J	AB	100 μH,Choke
L702	VP-DH101K0000	J	AB	100 μH,Choke

NO.	PARTS CODE	★	PRICE RANK	DESCRIPTION
L801	RCILZ0008AWZZ	J	AH	Line Filter
L901~904	RCILZ0137AWZZ	J		0.29 µH
L905	RCILZ0137AWZZ	J		0.29 µH [PC671H Only]
LT21,22	VP-XH2R2K0000	J	AB	2.2 µH,Choke

VARIABLE RESISTORS

VR351	RVR-M0026AWZZ	J	AC	10 kohm (B),Semi-VR [FM Mute Level]
VR701	RVR-B0017AWZZ	J	AE	20 kohms [SUB Woofer Volume] [PC671H Only]

VIBRATORS

X351	92LCRSTL1425A	J	AF	Crystal,456 kHz
X352	RCRSP0002AWZZ	J	AH	Crystal,4.5 MHz
X501	RCRM-0173AFZZ	J	AE	Ceramic,8 MHz
XL701	RCRSP0003AWZZ	J	AH	Crystal,4.19 MHz
XT21	RCRSB0030AWZZ	J	AH	Crystal,4.332 MHz

CAPACITORS

C1	VCEAZA1CW476M	J	AB	47 µF,16V,Electrolytic
C2	VCKYTV1HB103K	J	AA	0.01 µF,50V
C3	VCEAZA1HW105M	J	AB	1 µF,50V,Electrolytic
C4	VCEAZA1HW104M	J	AB	0.1 µF,50V,Electrolytic
C5,6	VCTYPA1CX333K	J	AA	0.033 µF,16V
C7	VCEAZA1HW104M	J	AB	0.1 µF,50V,Electrolytic
C8	VCTYPA1CX683K	J	AA	0.068 µF,16V
C9	VCTYPA1CX473K	J	AA	0.047 µF,16V
C10	VCCSTV1HL181J	J	AA	180 pF,50V
C11,12	VCTYPA1CX104K	J	AB	0.1 µF,16V
C13	VCKYTV1HB331K	J	AA	330 pF,50V
C14,15	VCKYTV1HB103K	J	AA	0.01 µF,50V
C16	VCKYTV1HB472K	J	AA	0.0047 µF,50V
C17	VCKYTV1HB102K	J	AA	0.001 µF,50V
C18	VCEAZA1HW474M	J	AB	0.47 µF,50V,Electrolytic
C19	VCEAZA1HW105M	J	AB	1 µF,50V,Electrolytic
C20	VCEAZA1CW476M	J	AB	47 µF,16V,Electrolytic
C21	VCKYTV1HB332K	J	AA	0.0033 µF,50V
C22	VCCSPA1HL221J	J	AA	220 pF,50V
C23	VCKYTV1HB272K	J	AA	0.0027 µF,50V
C24	VCCSTV1HL2R2C	J	AB	2.2 pF,50V
C25	VCCSTV1HL270J	J	AA	27 pF,50V
C26	VCTYPA1CX333K	J	AA	0.033 µF,16V
C27	VCKYTV1HB102K	J	AA	0.001 µF,50V
C28	VCTYPA1CX104K	J	AB	0.1 µF,16V
C29	VCEAZA1HW475M	J	AB	4.7 µF,50V,Electrolytic
C30	VCEAZA1HW104M	J	AB	0.1 µF,50V,Electrolytic
C31	VCEAZA0JW227M	J	AC	220 µF,6.3V,Electrolytic
C32	VCKYTV1HB103K	J	AA	0.01 µF,50V
C33	VCEAZA1HW474M	J	AB	0.47 µF,50V,Electrolytic
C34	VCEAZA1HW334M	J	AB	0.33 µF,50V,Electrolytic
C35	VCEAZA1HW105M	J	AB	1 µF,50V,Electrolytic
C36	VCEAZA1CW107M	J	AC	100 µF,16V,Electrolytic
C37	VCKZPA1HF223Z	J	AA	0.022 µF,50V
C38	VCKYTV1HB103K	J	AA	0.01 µF,50V
C39,40	VCTYPA1CX473K	J	AA	0.047 µF,16V
C41	VCCSPA1HL120J	J	AA	12 pF,50V
C42	VCCSPA1HL150J	J	AA	15 pF,50V
C43	VCEAZA0JW337M	J	AC	330 µF,6.3V,Electrolytic
C44~47	VCCCTV1HH101J	J	AA	100 pF (CH),50V
C48	VCCSPA1HL101J	J	AA	100 pF,50V
C49	VCCCTV1HH101J	J	AA	100 pF (CH),50V
C50	VCKYTV1EF223Z	J	AA	0.022 µF,25V
C51,52	VCEAZA1CW107M	J	AC	100 µF,16V,Electrolytic
C54	VCKYTV1HB102K	J	AA	0.001 µF,50V
C55	VCEAZA1CW107M	J	AC	100 µF,16V,Electrolytic
C56	VCKYTV1EF223Z	J	AA	0.022 µF,25V
C57	VCKYBT1HB102K	J	AA	0.001 µF,50V
C71,72	VCEAZA1HW106M	J	AB	10 µF,50V,Electrolytic
C73,74	VCKYTV1HB221K	J	AA	220 pF,50V
C75	VCKYTV1HB102K	J	AA	0.001 µF,50V
C76	VCKZPA1HF223Z	J	AA	0.022 µF,50V
C77	VCEAZA1CW107M	J	AC	100 µF,16V,Electrolytic
C82	VCEAZA1CW107M	J	AC	100 µF,16V,Electrolytic
C83	VCTYBT1EF223Z	J	AA	0.022 µF,25V
C98	VCKZPA1HF223Z	J	AA	0.022 µF,50V
C99	VCEAZA1AW107M	J	AB	100 µF,10V,Electrolytic
C101,102	VCKYMN1HB102K	J	AA	0.001 µF,50V
C105,106	VCKYMN1HB181K	J	AA	180 pF,50V
C107,108	VCKYMN1HB102K	J	AA	0.001 µF,50V
C109	VCKZPA1HF473Z	J	AA	0.047 µF,50V
C111~114	VCKYMN1HB331K	J	AA	330 pF,50V
C115,116	VCEAZA1EW476M	J	AB	47 µF,25V,Electrolytic
C117,118	VCTYPA1EX333K	J	AA	0.033 µF,25V
C119,120	VCKYMN1HB561K	J	AA	560 pF,50V
C121	RC-EZD105AF1H	J	AB	1 µF,50V,Electrolytic
C122	VCEAZA1HW105M	J	AB	1 µF,50V,Electrolytic
C123	VCKYBT1HB102K	J	AA	0.001 µF,50V
C124	VCKYPA1HB102K	J	AA	0.001 µF,50V
C127	VCTYMN1EF223Z	J	AA	0.022 µF,25V
C128	RC-EZD335AF1H	J	AB	3.3 µF,50V,Electrolytic
C131,132	VCKYMN1HB102K	J	AA	0.001 µF,50V
C133,134	VCEAZA1EW226M	J	AB	22 µF,25V,Electrolytic
C135,136	VCTYPA1CX683K	J	AA	0.068 µF,16V
C137	VCKYBT1HB102K	J	AA	0.001 µF,50V
C139,140	VCTYMN1CX332K	J	AA	0.0033 µF,16V
C141,142	RC-EZD105AF1H	J	AB	1 µF,50V,Electrolytic
C145	VCEAZA1EW226M	J	AB	22 µF,25V,Electrolytic
C146	VCEAZA1CW227M	J	AC	220 µF,16V,Electrolytic
C147	VCTYMN1EF223Z	J	AA	0.022 µF,25V
C150	VCQYKA1HM392K	J	AA	0.0039 µF,50V,Mylar
C151	VCQYKA1HM273K	J	AB	0.027 µF,50V,Mylar
C152	VCEAZA1EW476M	J	AB	47 µF,25V,Electrolytic
C153	VCEAZA1CW107M	J	AC	100 µF,16V,Electrolytic
C301	VCKYMN1HB102K	J	AA	0.001 µF,50V
C321	VCEAZA1CW107M	J	AC	100 µF,16V,Electrolytic
C322	VCKZPA1HF223Z	J	AA	0.022 µF,50V
C323	VCKZPA1HF223Z	J	AA	0.022 µF,50V
C323	VCTYMN1EF223Z	J	AA	0.022 µF,25V
C330	VCCUMN1HJ270J	J	AA	27 pF (UJ),50V
C331	VCKYPA1HF473Z	J	AB	0.047 µF,50V
C332	VCTYMN1EF223Z	J	AA	0.022 µF,25V
C334	VCCUMN1HJ270J	J	AA	27 pF (UJ),50V
C335	VCCSPA1HL561J	J	AA	560 pF,50V
C337	VCTYMN1EF223Z	J	AA	0.022 µF,25V
C338	VCKYMN1HB102K	J	AA	0.001 µF,50V
C341	VCTYMN1EF223Z	J	AA	0.022 µF,25V
C342	VCTYMN1EF223Z	J	AA	0.022 µF,25V
C343,344	VCCSMN1HL330J	J	AA	33 pF,50V
C345~347	VCTYMN1EF223Z	J	AA	0.022 µF,25V
C350	VCTYMN1EF223Z	J	AA	0.022 µF,25V
C351	VCTYMN1EF223Z	J	AA	0.022 µF,25V
C352	VCEAZA1CW106M	J	AC	10 µF,16V,Electrolytic
C353	VCTYMN1EF223Z	J	AA	0.022 µF,25V
C354	VCTYMN1EF223Z	J	AA	0.022 µF,25V
C355	VCCSMN1HL220J	J	AA	22 pF,50V
C356	VCKYMN1HB102K	J	AA	0.001 µF,50V
C357	VCEAZA1HW225M	J	AB	2.2 µF,50V,Electrolytic
C358	VCEAZA1HW105M	J	AB	1 µF,50V,Electrolytic
C361	VCTYMN1EF223Z	J	AA	0.022 µF,25V
C362	VCEAZA1HW335M	J	AB	3.3 µF,50V,Electrolytic
C363	VCTYMN1EF223Z	J	AA	0.022 µF,25V
C364	VCEAZA1CW106M	J	AC	10 µF,16V,Electrolytic
C365	VCTYPA1CX223K	J	AA	0.022 µF,16V
C366	VCKYMN1HB102K	J	AA	0.001 µF,50V
C367	VCEAZA1HW105M	J	AB	1 µF,50V,Electrolytic
C368	VCEAZA1HW105M	J	AB	1 µF,50V,Electrolytic
C369	VCCSBT1HL270J	J	AA	27 pF,50V
C370~372	VCEAZA1HW105M	J	AB	1 µF,50V,Electrolytic
C373,374	VCTYPA1CX333K	J	AA	0.033 µF,16V
C375	VCEAZA1HW335M	J	AB	3.3 µF,50V,Electrolytic
C380	VCEAZA1CW106M	J	AC	10 µF,16V,Electrolytic
C381	VCCCMN1HH120J	J	AA	12 pF (CH),50V
C382	VCCCMN1HH150J	J	AA	15 pF (CH),50V
C384	VCKYMN1HB102K	J	AA	0.001 µF,50V
C385	VCTYMN1CY103K	J	AA	0.01 µF,16V
C386	VCKYMN1HB331K	J	AA	330 pF,50V
C387	VCTYMN1EF223Z	J	AA	0.022 µF,25V
C391	VCEAZA1CW476M	J	AB	47 µF,16V,Electrolytic
C392	VCKYMN1HB102K	J	AA	0.001 µF,50V
C393	VCEAZA1HW105M	J	AB	1 µF,50V,Electrolytic
C394	VCEAZA1CW476M	J	AB	47 µF,16V,Electrolytic
C395	VCTYMN1EF223Z	J	AA	0.022 µF,25V
C396	VCEAZA1AW107M	J	AB	100 µF,10V,Electrolytic
C397	VCTYMN1EF223Z	J	AA	0.022 µF,25V
C398	VCEAZA1AW107M	J	AB	100 µF,10V,Electrolytic
C399	VCTYMN1EF223Z	J	AA	0.022 µF,25V
C401,402	VCQYKA1HM473K	J	AB	0.047 µF,50V,Mylar
C403,404	VCQYKA1HM823K	J	AC	0.082 µF,50V,Mylar
C405,406	VCEAEA1HW224M	J	AB	0.22 µF,50V,Electrolytic
C407,408	VCQYKA1HM184K	J	AC	0.018 µF,50V,Mylar
C409,410	VCQYKA1HM683K	J	AB	0.068 µF,50V,Mylar

NO.	PARTS CODE	★	PRICE RANK	DESCRIPTION
C411,412	VCEAEA1HW224M	J	AB	0.22 µF,50V,Electrolytic
C413,414	VCQYKA1HM273K	J	AB	0.027 µF,50V,Mylar
C415,416	VCTYMN0JY153M	J	AA	0.015 µF,6.3V
C417	VCQYKA1HM222K	J	AA	0.0022 µF,50V,Mylar
C418	VCTYMN1CX222K	J	AA	0.0022 µF,16V
C419,420	VCQYKA1HM472K	J	AB	0.0047 µF,50V,Mylar
C421	RC-EZD105AF1H	J	AB	1 µF,50V,Electrolytic
C422	VCEAZA1HW105M	J	AB	1 µF,50V,Electrolytic
C423~426	VCEAZA1HW106M	J	AB	10 µF,50V,Electrolytic
C427,428	VCQYKA1HM473K	J	AB	0.047 µF,50V,Mylar
C429,430	VCEAZA1HW225M	J	AB	2.2 µF,50V,Electrolytic
C431,432	VCEAZA1EW476M	J	AB	47 µF,25V,Electrolytic
C433,434	VCEAZA1HW225M	J	AB	2.2 µF,50V,Electrolytic
C435	VCEAZA1EW476M	J	AB	47 µF,25V,Electrolytic
C436~438	VCEAZA1EW226M	J	AB	22 µF,25V,Electrolytic
C439~442	VCKYMN1HB102K	J	AA	0.001 µF,50V
C443	VCEAZA1HW105M	J	AB	1 µF,50V,Electrolytic
C444	RC-EZD105AF1H	J	AB	1 µF,50V,Electrolytic
C445,446	VCKYMN1HB101K	J	AA	100 pF,50V
C447,448	VCEAZA1HW225M	J	AB	2.2 µF,50V,Electrolytic
C449~458	VCQYKA1HM473K	J	AB	0.047 µF,50V,Mylar
C459	VCEAZA1CW107M	J	AC	100 µF,16V,Electrolytic
C460	VCTYMN1EF223Z	J	AA	0.022 µF,25V
C461~464	VCKYMN1HB391K	J	AA	390 pF,50V
C465	VCKYPA1HB102K	J	AA	0.001 µF,50V
C471	VCQYKA1HM473K	J	AB	0.047 µF,50V,Myla [PC671H Only]
C472	VCCSPA1HL101J	J	AA	100 pF,50V [PC671H Only]
C473	VCEAZA1EW476M	J	AB	47 µF,25V,Electrolytic [PC671H Only]
C474	VCQYKA1HM154K	J	AB	0.15 µF,50V,Mylar [PC671H Only]
C475	VCEAZA1EW476M	J	AB	47 µF,25V,Electrolytic [PC671H Only]
C476	VCQYKA1HM154K	J	AB	0.15 µF,50V,Mylar [PC671H Only]
C477	VCCSPA1HL101J	J	AA	100 pF,50V [PC671H Only]
C478	VCQYKA1HM823K	J	AC	0.082 µF,50V,Mylar [PC671H Only]
C479	VCEAZA1HW106M	J	AB	10 µF,50V,Electrolytic [PC671H Only]
C480	VCEAZA1EW476M	J	AB	47 µF,25V,Electrolytic [PC671H Only]
C481	VCKZPA1HF223Z	J	AA	0.022 µF,50V [PC671H Only]
C482	VCEAZA1HW225M	J	AB	2.2 µF,50V,Electrolytic [PC671H Only]
C484	VCKYMN1HB102K	J	AA	0.001 µF,50V
C501	VCQYKA1HM104K	J	AB	0.1 µF,50V,Mylar
C502,503	VCEAZA1HW105M	J	AB	1 µF,50V,Electrolytic
C504	VCEAZA1EW476M	J	AB	47 µF,25V,Electrolytic
C505	VCEAEA1HW474M	J	AB	0.47 µF,50V,Electrolytic
C506	VCTYMN1EF223Z	J	AA	0.022 µF,25V
C507	VCKZPA1HF473Z	J	AA	0.047 µF,50V
C508	VCKYMN1HB681K	J	AA	680 pF,50V
C509	VCQYKA1HM104K	J	AB	0.1 µF,50V,Mylar
C510,511	VCEAEA1HW474M	J	AB	0.47 µF,50V,Electrolytic
C512,513	VCEAEA1HW475M	J	AB	4.7 µF,50V,Electrolytic
C514	VCQYKA1HM823K	J	AC	0.082 µF,50V,Mylar
C515	VCQYKA1HM332K	J	AA	0.0033 µF,50V,Mylar
C516	VCEAZA1HW154M	J	AB	0.15 µF,50V,Electrolytic
C517	VCQYKA1HM823K	J	AC	0.082 µF,50V,Mylar
C518	RC-EZD335AF1H	J	AB	3.3 µF,50V,Electrolytic
C519	VCEAEA1HW474M	J	AB	0.47 µF,50V,Electrolytic
C520	VCEAZA1HW154M	J	AB	0.15 µF,50V,Electrolytic
C521	VCEAEA1HW334M	J	AB	0.33 µF,50V,Electrolytic
C522	VCEAZA1HW154M	J	AB	0.15 µF,50V,Electrolytic
C523,524	VCEAZA1HW106M	J	AB	10 µF,50V,Electrolytic
C525	RC-EZD335AF1H	J	AB	3.3 µF,50V,Electrolytic
C526	VCEAZA1HW154M	J	AB	0.15 µF,50V,Electrolytic
C527	VCEAZA1HW106M	J	AB	10 µF,50V,Electrolytic
C528	VCEAEA1HW475M	J	AB	4.7 µF,50V,Electrolytic
C529	VCEAEA1HW474M	J	AB	0.47 µF,50V,Electrolytic
C530	VCEAEA1HW475M	J	AB	4.7 µF,50V,Electrolytic
C531	VCEAZA1HW225M	J	AB	2.2 µF,50V,Electrolytic
C532	VCEAZA1CW227M	J	AC	220 µF,16V,Electrolytic
C533	VCEAEA1HW474M	J	AB	0.47 µF,50V,Electrolytic
C534	VCQYKA1HM104K	J	AB	0.1 µF,50V,Mylar
C535~538	VCEAZA1HW106M	J	AB	10 µF,50V,Electrolytic
C539	VCEAZA1CW227M	J	AC	220 µF,16V,Electrolytic
C540	VCEAZA1HW106M	J	AB	10 µF,50V,Electrolytic
C541,542	VCEAZA1CW227M	J	AC	220 µF,16V,Electrolytic
C543	VCQYKA1HM104K	J	AB	0.1 µF,50V,Mylar
C544	VCEAZA1CW227M	J	AC	220 µF,16V,Electrolytic
C546	VCTYMN1EF223Z	J	AA	0.022 µF,25V
C547	VCKZPA1HF223Z	J	AA	0.022 µF,50V
C549~551	VCKYMN1HB101K	J	AA	100 pF,50V
C563	VCTYMN1EF223Z	J	AA	0.022 µF,25V
C601,602	VCQYKA1HM473K	J	AB	0.047 µF,50V,Mylar
C603,604	VCEAZA1EW476M	J	AB	47 µF,25V,Electrolytic
C605,606	VCCSPA1HL101J	J	AA	100 pF,50V
C607	VCEAZA1EW476M	J	AB	47 µF,25V,Electrolytic
C608	VCTYMN1CX332K	J	AA	0.0033 µF,16V
C611,612	VCEAZA1HW106M	J	AB	10 µF,50V,Electrolytic
C613	VCEAZA1CW227M	J	AC	220 µF,16V,Electrolytic
C614	VCKZPA1HF223Z	J	AA	0.022 µF,50V
C615~618	VCKYMN1HB102K	J	AA	0.001 µF,50V
C620	VCTYMN1CX332K	J	AA	0.0033 µF,16V
C621	VCKYMN1HB102K	J	AA	0.001 µF,50V
C622,623	VCKYPA1HB102K	J	AA	0.001 µF,50V
C627	VCEAZA1EW226M	J	AB	22 µF,25V,Electrolytic
C651	VCKYMN1HB271K	J	AA	270 pF,50V
C652	VCKYPA1HB103K	J	AA	0.01 µF,50V
C653	VCTYMN1CX272K	J	AA	0.0027 µF,16V
C655,656	VCTYMN1CX682K	J	AA	0.0068 µF,16V
C657	VCKYMN1HB271K	J	AA	270 pF,50V
C659	VCTYMN1CX272K	J	AA	0.0027 µF,16V
C661~663	VCTYMN1EF223Z	J	AA	0.022 µF,25V
C664~666	VCEAZA1HW225M	J	AB	2.2 µF,50V,Electrolytic
C667	VCTYMN1EF223Z	J	AA	0.022 µF,25V
C702	RC-EZD105AF1H	J	AB	1 µF,50V,Electrolytic
C703,704	VCKYMN1HB102K	J	AA	0.001 µF,50V [PC671H Only]
C705	VCEAZA1EW476M	J	AB	47 µF,25V,Electrolytic
C706	RC-EZD105AF1H	J	AB	1 µF,50V,Electrolytic
C707	VCCCMN1HH150J	J	AA	15 pF (CH),50V
C708	VCCSMN1HL180J	J	AA	18 pF,50V
C709	VCKZPA1HF223Z	J	AA	0.022 µF,50V
C710	RC-EZD227AF1A	J	AC	220 µF,10V,Electrolytic
C711	VCTYMN1CY103N	J	AA	0.01 µF,16V
C712	RC-EZD335AF1H	J	AB	3.3 µF,50V,Electrolytic
C713,714	VCTYMN1EF223Z	J	AA	0.022 µF,25V
C715,716	RC-EZD476AF1C	J	AC	47 µF,16V,Electrolytic
C717	VCTYMN1EF223Z	J	AA	0.022 µF,25V
C718	RC-EZD476AF1C	J	AC	47 µF,16V,Electrolytic
C719	VCTYMN1EF223Z	J	AA	0.022 µF,25V
C721	VCEAZA1HW476M	J	AB	47 µF,50V,Electrolytic
C722	VCEAZA1HW106M	J	AB	10 µF,50V,Electrolytic
C723	RC-EZD104AF1H	J	AB	0.1 µF,50V,Electrolytic
C801	VCEAZW1HW228M	J	AH	2200 µF,50V,Electrolytic
C802	VCEAZA1VW107M	J	AC	100 µF,35V,Electrolytic
C803,804	VCEAZA1HW476M	J	AB	47 µF,50V,Electrolytic
C805,806	VCQYKA1HM473K	J	AB	0.047 µF,50V,Mylar
C807~810	VCFYHA1HA224J	J	AC	0.22 µF,50V,Thin Film
C811	VCEAZV1HW227M	J	AD	220 µF,50V,Electrolytic
C812,813	VCEAZA1HW107M	J	AC	100 µF,50V,Electrolytic
C814	VCKZPA1HF473Z	J	AA	0.047 µF,50V
C815	VCEAZV1VW477M	J		470 µF,35V,Electrolytic
C816	VCEAZA1CW106M	J	AC	10 µF,16V,Electrolytic
C817	VCEAEA1HW475M	J	AB	4.7 µF,50V,Electrolytic
C818	VCEAZA0JW108M	J	AC	1000 µF,6.3V,Electrolytic
C819,820	VCQYKA1HM104K	J	AB	0.1 µF,50V,Mylar
C821	VCEAZA1CW476M	J	AB	47 µF,16V,Electrolytic
C822	VCEAEA1VW106M	J	AB	10 µF,35V,Electrolytic
C823	VCKZPA1HF223Z	J	AA	0.022 µF,50V
C824	VCEAEA1HW105M	J	AB	1 µF,50V,Electrolytic
C825	VCEAZW1EW338M	J	AG	3300 µF,25V,Electrolytic
C826	RC-KZ001LAWZZ	J	AB	0.0047 µF,250VAC,Ceramic
C827	VCQYKA1HM104K	J	AB	0.1 µF,50V,Mylar
C828	VCKZPA1HF223Z	J	AA	0.022 µF,50V
C829	VCEAZA1EW227M	J	AC	220 µF,25V,Electrolytic
C901	VCEAEA1HW105M	J	AB	1 µF,50V,Electrolytic
C902	VCCSPA1HL221J	J	AA	220 pF,50V
C903	VCEAEA1HW105M	J	AB	1 µF,50V,Electrolytic
C904	VCEAEA1HW106M	J		10 µF,50V,Electrolytic
C905	VCCSPA1HL221J	J	AA	220 pF,50V
C906	VCEAEA1HW105M	J	AB	1 µF,50V,Electrolytic [PC671H Only]
C907	VCEAEA1HW106M	J		10 µF,50V,Electrolytic
C908	VCKYPA1HB102K	J	AA	0.001 µF,50V [PC671H Only]
C909,910	VCEAZW1HW228M	J	AH	2200 µF,50V,Electrolytic
C911,912	VCEAZA1HW107M	J	AC	100 µF,50V,Electrolytic
C913	VCKYPA1HB102K	J	AA	0.001 µF,50V
C914	VCKYBT1HB102K	J	AA	0.001 µF,50V
C915	VCKYPA1HB121K	J	AA	120 pF,50V
C916	VCCSPA1HL150J	J	AA	15 pF,50V

NO.	PARTS CODE	★	PRICE RANK	DESCRIPTION
C917,918	VCEAZA1HW476M	J	AB	47 µF,50V,Electrolytic
C919	VCTYPA1EX152K	J	AA	0.0015 µF,25V
C920	VCTYPA1EX561K	J		560 pF,25V
C921,922	VCEAEA1HW105M	J	AB	1 µF,50V,Electrolytic
C923	VCKYPA1HB121K	J	AA	120 pF,50V
C924	VCCSPA1HL150J	J	AA	15 pF,50V
C925	VCEAZA1HW476M	J	AB	47 µF,50V,Electrolytic [PC671H Only]
C926	VCCSPA1HL470J	J	AA	47 pF,50V [PC671H Only]
C927,928	VCEAZA1VW476M	J	AC	47 µF,35V,Electrolytic
C929	VCCSPA1HL150J	J	AA	15 pF,50V [PC671H Only]
C930,931	VCCSPA1HL470J	J	AA	47 pF,50V
C932	VCKYBT1HB102K	J	AA	0.001 µF,50V
C933	VCEAZA1VW220M	J		22 pF,35V,Electrolytic
C934~937	VCQYKA1HM104K	J	AB	0.1 µF,50V,Mylar
C938	VCEAZA1HW476M	J	AB	47 µF,50V,Electrolytic
C940	VCQYKA1HM104K	J	AB	0.1 µF,50V,Mylar [PC671H Only]
C941	VCKZPA1HF223Z	J	AA	0.022 µF,50V
C942,943	VCEAZA1HW476M	J	AB	47 µF,50V,Electrolytic
C944	VCEAZV1EW108M	J	AE	1000 µF,25V,Electrolytic
C945	VCEAZV1EW228M	J	AG	2200 µF,25V,Electrolytic
C946	VCKYBT1HB102K	J	AA	0.001 µF,50V
C947,948	VCKZPA1HF223Z	J	AA	0.022 µF,50V
C949	VCQYKA1HM104K	J	AB	0.1 µF,50V,Mylar
C950	VCQYKA1HM104K	J	AB	0.1 µF,50V,Mylar
C951~958	VCKZPA1HF223Z	J	AA	0.022 µF,50V
C959	VCQYKA1HM104K	J	AB	0.1 µF,50V,Mylar
C960	VCQYKA1HM104K	J	AB	0.1 µF,50V,Mylar
C961,962	VCKYPA1HB102K	J	AA	0.001 µF,50V
C963	VCQYKA1HM104K	J	AB	0.1 µF,50V,Mylar
C964	VCKYPA1HB102K	J	AA	0.001 µF,50V
C965,966	VCKZPA1HF223Z	J	AA	0.022 µF,50V
C967	VCKYPA1HB222K	J	AA	0.0022 µF,50V
C968	VCKYPA1HB102K	J	AA	0.001 µF,50V
C970	VCKZPA1HF223Z	J	AA	0.022 µF,50V [PC671H Only]
C971	VCKYPA1HB222K	J	AA	0.0022 µF,50V
C972	VCKZPA1HF223Z	J	AA	0.022 µF,50V [PC671H Only]
C973	VCKZPA1HF103Z	J	AA	0.01 µF,50V
C976	VCEAZA1EW226M	J	AB	22 µF,25V,Electrolytic [PC671H Only]
C978	VCEAZA1HW476M	J	AB	47 µF,50V,Electrolytic
C979	VCEAEA1VW106M	J		10 µF,35V,Electrolytic
C980	VCKZPA1HF103Z	J	AA	0.01 µF,50V
C981	VCEAZA1EW226M	J	AB	22 µF,25V,Electrolytic
C982~986	VCKZPA1HF223Z	J	AA	0.022 µF,50V [PC671H Only]
CT21	VCEAZA1AW476M	J	AB	47 µF,10V,Electrolytic
CT22	VCTYMN1EF223Z	J	AA	0.022 µF,25V
CT23	VCEAZA1CW106M	J	AC	10 µF,16V,Electrolytic
CT24	VCTYMN1EF223Z	J	AA	0.022 µF,25V
CT25	VCKYMN1HB561H	J		560 pF,50V
CT26,27	VCCCPA1HH220J	J	AA	22 pF (CH),50V
CT28	VCEAZA1AW476M	J	AB	47 µF,10V,Electrolytic
CT29	VCTYMN1EF223Z	J	AA	0.022 µF,25V
CT36	VCKYPA1HF223Z	J	AB	0.022 µF,50V
CT37	VCTYMN1EF223Z	J	AA	0.022 µF,25V
CT43	VCEAZA1CW106M	J	AC	10 µF,16V,Electrolytic

RESISTORS

NO.	PARTS CODE	★	PRICE RANK	DESCRIPTION
	VRD-MN2BD000C	J	AA	0 ohm,Jumper,ø1.4x3.5mm,Ivory
	VRS-TV2AB000J	J	AA	0 ohm,Jumper,1.25x2mm,Green
R1	VRS-TV2AB220J	J	AA	22 ohms,1/10W
R2	VRD-ST2CD102J	J	AA	1 kohm,1/6W
R8	VRS-TV2AB153J	J	AA	15 kohms,1/10W
R9	VRS-TV2AB104J	J	AA	100 kohm,1/10W
R10	VRS-TV2AB222J	J	AA	2.2 kohms,1/10W
R11	VRD-ST2CD682J	J	AA	6.8 kohms,1/6W
R12	VRD-ST2CD101J	J	AA	100 ohm,1/6W
R13	VRS-TV2AB102J	J	AA	1 kohm,1/10W
R14	VRS-TV2AB273J	J	AA	27 kohms,1/10W
R15	VRS-TV2AB123J	J	AA	12 kohms,1/10W
R16	VRS-TV2AB332J	J	AA	3.3 kohms,1/10W
R17	VRS-TV2AB333J	J	AA	33 kohms,1/10W
R18	VRS-TV2AB153J	J	AA	15 kohms,1/10W
R19	VRD-ST2CD102J	J	AA	1 kohm,1/6W
R20	VRS-TV2AB102J	J	AA	1 kohm,1/10W
R21	VRS-TV2AB152J	J	AA	1.5 kohms,1/10W
R22	VRS-TV2AB821J	J	AA	820 ohms,1/10W
R23	VRS-TV2AB103J	J	AA	10 kohm,1/10W
R24	VRS-TV2AB473J	J	AA	47 kohms,1/10W
R25	VRS-TV2AB152J	J	AA	1.5 kohms,1/10W
R26	VRS-TV2AB823J	J	AA	82 kohms,1/10W
R27	VRS-TV2AB393J	J	AA	39 kohms,1/10W
R28	VRS-TV2AB103J	J	AA	10 kohm,1/10W
R29	VRS-TV2AB563J	J	AA	56 kohms,1/10W
R30	VRS-TV2AB682J	J	AA	6.8 kohms,1/10W
R31	VRS-TV2AB122J	J	AA	1.2 kohms,1/10W
R32	VRS-TV2AB103J	J	AA	10 kohm,1/10W
R33	VRS-TV2AB122J	J	AA	1.2 kohms,1/10W
R34	VRS-TV2AB332J	J	AA	3.3 kohms,1/10W
R35,36	VRS-TV2AB224J	J	AA	220 kohms,1/10W
R37	VRD-ST2CD823J	J	AA	82 kohms,1/6W
R38	VRS-TV2AB471J	J	AA	470 ohms,1/10W
R39	VRD-ST2CD102J	J	AA	1 kohm,1/6W
R40	VRS-TV2AB562J	J	AA	5.6 kohms,1/10W
R41,42	VRS-TV2AB473J	J	AA	47 kohms,1/10W
R43	VRS-TV2AB563J	J	AA	56 kohms,1/10W
R44	VRS-TV2AB333J	J	AA	33 kohms,1/10W
R45	VRS-TV2AB472J	J	AA	4.7 kohms,1/10W
R46	VRS-TV2AB561J	J	AA	560 ohms,1/10W
R47	VRD-ST2CD103J	J	AA	10 kohm,1/6W
R50	VRS-TV2AB681J	J	AA	680 ohms,1/10W
R51	VRD-ST2CD335J	J	AA	3.3 Mohms,1/6W
R52	VRS-TV2AB273J	J	AA	27 kohms,1/10W
R53	VRS-TV2AB122J	J	AA	1.2 kohms,1/10W
R54	VRD-ST2CD331J	J	AA	330 ohms,1/6W
R55	VRD-ST2CD101J	J	AA	100 ohm,1/6W
R56	VRS-TV2AB682J	J	AA	6.8 kohms,1/10W
R57	VRD-ST2CD102J	J	AA	1 kohm,1/6W
R58~60	VRS-TV2AB102J	J	AA	1 kohm,1/10W
R61~63	VRD-ST2CD102J	J	AA	1 kohm,1/6W
R64	VRS-TV2AB220J	J	AA	22 ohms,1/10W
R65	VRD-ST2CD102J	J	AA	1 kohm,1/6W
R66	VRS-TV2AB221J	J	AA	220 ohms,1/10W
R71,72	VRD-ST2CD272J	J	AA	2.7 kohms,1/6W
R73,74	VRS-TV2AB104J	J	AA	100 kohm,1/10W
R80,81	VRD-ST2CD821J	J	AA	820 ohms,1/6W
R82,83	VRS-TV2AB391J	J	AA	390 ohms,1/10W
R84	VRD-ST2CD222J	J	AA	2.2 kohms,1/6W
R88,89	VRD-ST2CD122J	J	AA	1.2 kohms,1/6W
R90	VRD-ST2CD221J	J	AA	220 ohms,1/6W
R91	VRD-ST2CD102J	J	AA	1 kohm,1/6W
R93	VRS-TV2AB221J	J	AA	220 ohms,1/10W
R101,102	VRD-MN2BD102J	J	AA	1 kohm,1/8W
R103,104	VRD-MN2BD222J	J	AA	2.2 kohms,1/8W
R105,106	VRD-MN2BD332J	J	AA	3.3 kohms,1/8W
R107,108	VRD-MN2BD473J	J	AA	47 kohms,1/8W
R109,110	VRD-MN2BD472J	J	AA	4.7 kohms,1/8W
R111	VRD-ST2CD103J	J	AA	10 kohm,1/6W
R112~114	VRD-MN2BD103J	J	AA	10 kohm,1/8W
R115	VRD-MN2BD472J	J	AA	4.7 kohms,1/8W
R117,118	VRD-ST2CD102J	J	AA	1 kohm,1/6W
R119,120	VRD-ST2CD560J	J	AA	56 ohms,1/6W
R121,122	VRD-MN2BD104J	J	AA	100 kohm,1/8W
R123,124	VRD-MN2BD392J	J	AA	3.9 kohms,1/8W
R125,126	VRD-MN2BD562J	J	AA	5.6 kohms,1/8W
R131	VRD-MN2BD183J	J	AA	18 kohms,1/8W
R132	VRD-ST2CD183J	J	AA	18 kohms,1/6W
R134	VRD-MN2BD683J	J	AA	68 kohms,1/8W
R135,136	VRD-MN2BD272J	J	AA	2.7 kohms,1/8W
R137,138	VRD-MN2BD682J	J	AA	6.8 kohms,1/8W
R139,140	VRD-MN2BD561J	J	AA	560 ohms,1/8W
R141,142	VRD-MN2BD560J	J	AA	56 ohms,1/8W
R145,146	VRD-MN2BD103J	J	AA	10 kohm,1/8W
R153	VRD-MN2BD103J	J	AA	10 kohm,1/8W
R154	VRD-ST2CD103J	J	AA	10 kohm,1/6W
R158	VRD-ST2EE331J	J	AA	330 ohms,1/4W
R160	VRD-RT2HD151J	J	AA	150 ohms,1/2W
R162	VRD-MN2BD473J	J	AA	47 kohms,1/8W
R164	VRD-MN2BD472J	J	AA	4.7 kohms,1/8W
R166	VRD-MN2BD473J	J	AA	47 kohms,1/8W
R167	VRD-MN2BD104J	J	AA	100 kohm,1/8W
R168	VRD-MN2BD120J	J	AA	12 ohms,1/8W
R174	VRD-RT2HD151J	J	AA	150 ohms,1/2W
R181,182	VRD-ST2CD224J	J	AA	220 kohms,1/6W
R301	VRD-MN2BD331J	J	AA	330 ohms,1/8W
R323	VRD-MN2BD683J	J	AA	68 kohms,1/8W
R336	VRD-ST2CD102J	J	AA	1 kohm,1/6W
R344	VRD-MN2BD471J	J	AA	470 ohms,1/8W
R345	VRD-MN2BD472J	J	AA	4.7 kohms,1/8W
R346	VRD-MN2BD331J	J	AA	330 ohms,1/8W
R347	VRD-MN2BD682J	J	AA	6.8 kohms,1/8W
R348	VRD-MN2BD681J	J	AA	680 ohms,1/8W
R349	VRD-ST2CD330J	J	AA	33 ohms,1/6W

NO.	PARTS CODE	★	PRICE RANK	DESCRIPTION
R350	VRD-ST2CD272J	J	AA	2.7 kohms,1/6W
R351	VRD-MN2BD562J	J	AA	5.6 kohms,1/8W
R352	VRD-MN2BD102J	J	AA	1 kohm,1/8W
R353	VRD-MN2BD271J	J	AA	270 ohms,1/8W
R354	VRD-ST2CD392J	J	AA	3.9 kohms,1/6W
R355	VRD-MN2BD332J	J	AA	3.3 kohms,1/8W
R356	VRD-MN2BD102J	J	AA	1 kohm,1/8W
R357	VRD-ST2CD474J	J	AA	470 kohms,1/6W
R358	VRD-MN2BD822J	J	AA	8.2 kohms,1/8W
R359	VRD-MN2BD182J	J	AA	1.8 kohms,1/8W
R360	VRD-MN2BD472J	J	AA	4.7 kohms,1/8W
R361	VRD-MN2BD122J	J	AA	1.2 kohms,1/8W
R362	VRD-MN2BD122J	J	AA	1.2 kohms,1/8W
R363,364	VRD-MN2BD473J	J	AA	47 kohms,1/8W
R365,366	VRD-MN2BD103J	J	AA	10 kohm,1/8W
R367	VRD-MN2BD102J	J	AA	1 kohm,1/8W
R368	VRD-ST2CD333J	J	AA	33 kohms,1/6W
R369	VRD-MN2BD820J	J	AA	82 ohms,1/8W
R370~374	VRD-MN2BD102J	J	AA	1 kohm,1/8W
R376	VRD-MN2BD102J	J	AA	1 kohm,1/8W
R377	VRD-ST2CD473J	J	AA	47 kohms,1/6W
R378	VRD-MN2BD823J	J	AA	82 kohms,1/8W
R379	VRD-MN2BD222J	J	AA	2.2 kohms,1/8W
R380	VRD-MN2BD152J	J	AA	1.5 kohms,1/8W
R381	VRD-MN2BD103J	J	AA	10 kohm,1/8W
R382	VRD-ST2EE151J	J	AA	150 ohms,1/4W
R383~385	VRD-MN2BD562J	J	AA	5.6 kohms,1/8W
R387	VRD-MN2BD223J	J	AA	22 kohms,1/8W
R391	VRD-ST2EE391J	J	AA	390 ohms,1/4W
R392	VRD-ST2EE391J	J	AA	390 ohms,1/4W
R393	VRD-ST2CD102J	J	AA	1 kohm,1/6W
R395	VRD-ST2CD473J	J	AA	47 kohms,1/6W
R398	VRD-ST2CD122J	J	AA	1.2 kohms,1/6W
R401,402	VRD-MN2BD273J	J	AA	27 kohms,1/8W
R403,404	VRD-MN2BD182J	J	AA	1.8 kohms,1/8W
R405,406	VRD-MN2BD273J	J	AA	27 kohms,1/8W
R407,408	VRD-MN2BD182J	J	AA	1.8 kohms,1/8W
R409	VRD-ST2CD102J	J	AA	1 kohm,1/6W
R410	VRD-MN2BD102J	J	AA	1 kohm,1/8W
R411~413	VRD-ST2CD102J	J	AA	1 kohm,1/6W
R414	VRD-MN2BD102J	J	AA	1 kohm,1/8W
R415	VRD-ST2CD102J	J	AA	1 kohm,1/6W
R416	VRD-MN2BD102J	J	AA	1 kohm,1/8W
R417	VRD-ST2CD102J	J	AA	1 kohm,1/6W
R418	VRD-MN2BD102J	J	AA	1 kohm,1/8W
R419,420	VRD-MN2BD333J	J	AA	33 kohms,1/8W
R421,422	VRD-MN2BD272J	J	AA	2.7 kohms,1/8W
R423	VRD-MN2BD224J	J	AA	220 kohms,1/8W
R424	VRD-ST2CD224J	J	AA	220 kohms,1/6W
R425	VRD-MN2BD224J	J	AA	220 kohms,1/8W
R426~428	VRD-ST2CD102J	J	AA	1 kohm,1/6W
R429~432	VRD-MN2BD473J	J	AA	47 kohms,1/8W
R433	VRD-MN2BD103J	J	AA	10 kohm,1/8W
R434	VRD-MN2BD222J	J	AA	2.2 kohms,1/8W
R435,436	VRD-ST2CD223J	J	AA	22 kohms,1/6W
R437~440	VRD-ST2CD222J	J	AA	2.2 kohms,1/6W
R441~443	VRD-ST2CD223J	J	AA	22 kohms,1/6W
R444	VRD-ST2CD103J	J	AA	10 kohm,1/6W
R445~448	VRD-ST2CD331J	J	AA	330 ohms,1/6W
R449,450	VRD-MN2BD471J	J	AA	470 ohms,1/8W
R471,472	VRD-MN2BD224J	J	AA	220 kohms,1/8W [PC671H Only]
R473	VRD-MN2BD104J	J	AA	100 kohm,1/8W [PC671H Only]
R474	VRD-MN2BD153J	J	AA	15 kohms,1/8W [PC671H Only]
R475	VRD-MN2BD392J	J	AA	3.9 kohms,1/8W [PC671H Only]
R476	VRD-ST2CD273J	J	AA	27 kohms,1/6W [PC671H Only]
R477	VRD-MN2BD273J	J	AA	27 kohms,1/8W [PC671H Only]
R478	VRD-MN2BD682J	J	AA	6.8 kohms,1/8W [PC671H Only]
R479	VRD-MN2BD123J	J	AA	12 kohms,1/8W [PC671H Only]
R480	VRD-MN2BD152J	J	AA	1.5 kohms,1/8W [PC671H Only]
R481	VRD-MN2BD102J	J	AA	1 kohm,1/8W [PC671H Only]
R482	VRD-MN2BD104J	J	AA	100 kohm,1/8W [PC671H Only]
R483	VRD-ST2CD104J	J	AA	100 kohm,1/6W [PC671H Only]
R484	VRD-MN2BD104J	J	AA	100 kohm,1/8W [PC671H Only]
R501,502	VRD-MN2BD104J	J	AA	100 kohm,1/8W
R503	VRD-MN2BD102J	J	AA	1 kohm,1/8W
R504	VRD-MN2BD105J	J	AA	1 Mohm,1/8W
R505,506	VRD-ST2CD472J	J	AA	4.7 kohms,1/6W
R507	VRD-ST2CD102J	J	AA	1 kohm,1/6W
R508	VRD-MN2BD393J	J	AA	39 kohms,1/8W
R509	VRD-ST2CD472J	J	AA	4.7 kohms,1/6W
R510	VRD-MN2BD183J	J	AA	18 kohms,1/8W
R511	VRD-ST2CD102J	J	AA	1 kohm,1/6W
R512	VRD-ST2CD472J	J	AA	4.7 kohms,1/6W
R513	VRD-MN2BD332J	J	AA	3.3 kohms,1/8W
R514	VRD-MN2BD331J	J	AA	330 ohms,1/8W
R515	VRD-MN2BD332J	J	AA	3.3 kohms,1/8W
R516~518	VRD-ST2CD102J	J	AA	1 kohm,1/6W
R519	VRD-MN2BD102J	J	AA	1 kohm,1/8W
R520	VRD-MN2BD223J	J	AA	22 kohms,1/8W
R521~523	VRD-ST2CD102J	J	AA	1 kohm,1/6W
R601~604	VRD-MN2BD222J	J	AA	2.2 kohms,1/8W
R605,606	VRD-MN2BD223J	J	AA	22 kohms,1/8W
R607,608	VRD-MN2BD222J	J	AA	2.2 kohms,1/8W
R609	VRD-MN2BD104J	J	AA	100 kohm,1/8W
R610	VRD-ST2CD104J	J	AA	100 kohm,1/6W
R611,612	VRD-MN2BD561J	J	AA	560 ohms,1/8W
R613	VRD-ST2CD104J	J	AA	100 kohm,1/6W
R614	VRD-MN2BD104J	J	AA	100 kohm,1/8W
R615	VRD-MN2BD123J	J	AA	12 kohms,1/8W
R616,617	VRD-MN2BD102J	J	AA	1 kohm,1/8W
R618	VRD-MN2BD123J	J	AA	12 kohms,1/8W
R619	VRD-MN2BD270J	J	AA	27 ohms,1/8W
R620	VRD-ST2CD270J	J	AA	27 ohms,1/6W
R621,622	VRD-MN2BD272J	J	AA	2.7 kohms,1/8W
R623	VRD-ST2CD223J	J	AA	22 kohms,1/6W
R624	VRD-MN2BD223J	J	AA	22 kohms,1/8W
R625	VRD-MN2BD220J	J	AA	22 ohms,1/8W
R626	VRD-ST2CD220J	J	AA	22 ohms,1/6W
R627	VRD-ST2CD101J	J	AA	100 ohm,1/6W
R651	VRD-MN2BD103J	J	AA	10 kohm,1/8W
R652	VRD-MN2BD333J	J	AA	33 kohms,1/8W
R653	VRD-ST2CD123J	J	AA	12 kohms,1/6W
R654	VRD-ST2CD683J	J	AA	68 kohms,1/6W
R655	VRD-MN2BD563J	J	AA	56 kohms,1/8W
R656	VRD-ST2CD474J	J	AA	470 kohms,1/6W
R657	VRD-ST2CD153J	J	AA	15 kohms,1/6W
R658	VRD-MN2BD394J	J	AA	390 kohms,1/8W
R659	VRD-MN2BD564J	J	AA	560 kohms,1/8W
R660	VRD-MN2BD394J	J	AA	390 kohms,1/8W
R661	VRD-MN2BD274J	J	AA	270 kohms,1/8W
R662	VRD-MN2BD224J	J	AA	220 kohms,1/8W
R663	VRD-ST2EE331J	J	AA	330 ohms,1/4W
R664	VRD-MN2BD224J	J	AA	220 kohms,1/8W
R665	VRD-MN2BD104J	J	AA	100 kohm,1/8W
R666	VRD-MN2BD225J	J	AA	2.2 Mohms,1/8W
R668	VRD-ST2CD225J	J	AA	2.2 Mohms,1/6W
R670	VRD-ST2EE331J	J	AA	330 ohms,1/4W
R672	VRD-MN2BD104J	J	AA	100 kohm,1/8W
R674	VRD-MN2BD104J	J	AA	100 kohm,1/8W
R700	VRD-ST2CD103J	J	AA	10 kohm,1/6W
R701~703	VRD-MN2BD104J	J	AA	100 kohm,1/8W
R704~708	VRD-MN2BD102J	J	AA	1 kohm,1/8W
R709,710	VRD-ST2CD102J	J	AA	1 kohm,1/6W [PC671H Only]
R711	VRD-ST2CD102J	J	AA	1 kohm,1/6W
R712	VRD-ST2CD223J	J	AA	22 kohms,1/6W
R713,714	VRD-ST2CD102J	J	AA	1 kohm,1/6W
R715	VRD-MN2BD102J	J	AA	1 kohm,1/8W
R716	VRD-ST2CD102J	J	AA	1 kohm,1/6W
R719	VRD-ST2CD103J	J	AA	10 kohm,1/6W
R723	VRD-MN2BD103J	J	AA	10 kohm,1/8W
R725	VRD-ST2EE391J	J	AA	390 ohms,1/4W [PC671H Only]
R726,727	VRD-ST2CD103J	J	AA	10 kohm,1/6W [PC671H Only]
R728,729	VRD-ST2CD102J	J	AA	1 kohm,1/6W
R730~732	VRD-MN2BD102J	J	AA	1 kohm,1/8W
R733,734	VRD-ST2CD222J	J	AA	2.2 kohms,1/6W
R735	VRD-ST2CD182J	J	AA	1.8 kohms,1/6W
R736,737	VRD-MN2BD102J	J	AA	1 kohm,1/8W
R738	VRD-ST2CD102J	J	AA	1 kohm,1/6W
R739	VRD-ST2CD103J	J	AA	10 kohm,1/6W
R740~744	VRD-MN2BD102J	J	AA	1 kohm,1/8W
R745	VRD-ST2CD102J	J	AA	1 kohm,1/6W
R746,747	VRD-MN2BD103J	J	AA	10 kohm,1/8W
R748~750	VRD-ST2CD103J	J	AA	10 kohm,1/6W
R751	VRD-MN2BD332J	J	AA	3.3 kohms,1/8W
R752~757	VRD-MN2BD103J	J	AA	10 kohm,1/8W
R758	VRD-MN2BD122J	J	AA	1.2 kohms,1/8W
R759,760	VRD-MN2BD103J	J	AA	10 kohm,1/8W
R761	VRD-ST2CD102J	J	AA	1 kohm,1/6W
R762~768	VRD-MN2BD102J	J	AA	1 kohm,1/8W
R769	VRD-ST2CD102J	J	AA	1 kohm,1/6W
R770~772	VRD-MN2BD102J	J	AA	1 kohm,1/8W
R773,774	VRD-ST2CD102J	J	AA	1 kohm,1/6W
R775~779	VRD-MN2BD102J	J	AA	1 kohm,1/8W
R780,781	VRD-MN2BD103J	J	AA	10 kohm,1/8W

NO.	PARTS CODE	★	PRICE RANK	DESCRIPTION
R782,783	VRD-MN2BD102J	J	AA	1 kohm,1/8W
R784~789	VRD-ST2CD102J	J	AA	1 kohm,1/6W
R790	VRD-ST2CD330J	J	AA	33 ohms,1/6W
R791~793	VRD-MN2BD102J	J	AA	1 kohm,1/8W
R795	VRD-MN2BD473J	J	AA	47 kohms,1/8W
R797	VRD-MN2BD104J	J	AA	100 kohm,1/8W
R798	VRD-ST2EE101J	J	AA	100 ohm,1/4W
R799	VRD-MN2BD472J	J	AA	4.7 kohms,1/8W
R801	VRD-ST2CD123J	J	AA	12 kohms,1/6W
R804	VRD-ST2CD473J	J	AA	47 kohms,1/6W
R806	VRD-ST2CD222J	J	AA	2.2 kohms,1/6W
R807	VRD-ST2CD103J	J	AA	10 kohm,1/6W
R808	VRD-ST2EE221J	J	AA	220 ohms,1/4W
R809,810	VRD-ST2CD103J	J	AA	10 kohm,1/6W
R812	VRD-ST2CD100J	J	AA	10 ohm,1/6W
R901	VRD-ST2CD104J	J	AA	100 kohm,1/6W
R902	VRD-ST2CD683J	J	AA	68 kohms,1/6W
R903	VRD-ST2CD104J	J	AA	100 kohm,1/6W
R904	VRD-ST2CD683J	J	AA	68 kohms,1/6W
R905	VRD-ST2CD102J	J	AA	1 kohm,1/6W
R906	VRD-ST2CD103J	J	AA	10 kohm,1/6W [PC671H Only]
R907	VRD-ST2CD102J	J	AA	1 kohm,1/6W
R908	VRD-ST2CD683J	J	AA	68 kohms,1/6W [PC671H Only]
R909	VRD-ST2CD102J	J	AA	1 kohm,1/6W [PC671H Only]
R910,911	VRD-ST2EE223J	J	AA	22 kohms,1/4W
⚠ R912,913	VRG-ST2EC101J	J	AB	100 ohm,1/4W,Fusible
R916	VRD-ST2CD102J	J	AA	1 kohm,1/6W
R917	VRD-ST2CD563J	J	AA	56 kohms,1/6W
R918	VRD-ST2CD471J	J	AA	470 ohms,1/6W [PC651H]
R918	VRD-ST2CD471J	J	AA	470 ohms,1/6W [PC671H]
R919	VRD-ST2CD333J	J	AA	33 kohms,1/6W
R920	VRD-ST2CD104J	J	AA	100 kohm,1/6W
R921	VRD-ST2CD223J	J	AA	22 kohms,1/6W
R922	VRD-ST2CD471J	J	AA	470 ohms,1/6W [PC671H]
R922	VRD-ST2CD561J	J	AA	560 ohms,1/6W [PC651H]
R923	VRD-ST2CD563J	J	AA	56 kohms,1/6W
R924~926	VRD-ST2CD102J	J	AA	1 kohm,1/6W
R927	VRD-ST2CD471J	J	AA	470 ohms,1/6W [PC671H Only]
R928,929	VRD-ST2CD221J	J	AA	220 ohms,1/6W
R930	VRD-ST2CD563J	J	AA	56 kohms,1/6W [PC671H Only]
R931	VRD-ST2CD102J	J	AA	1 kohm,1/6W [PC671H Only]
R932	VRD-ST2CD183J	J	AA	18 kohms,1/6W
R933	VRD-ST2CD103J	J	AA	10 kohm,1/6W
R934	VRD-ST2EE4R7J	J	AA	4.7 ohms,1/4W
R937	VRD-ST2EE4R7J	J	AA	4.7 ohms,1/4W
R940	VRD-ST2EE4R7J	J	AA	4.7 ohms,1/4W [PC671H Only]
R941,942	VRD-RT2HD271J	J	AA	270 ohms,1/2W
R943	VRD-ST2EE6R8J	J	AA	6.8 ohms,1/4W
R944	VRD-ST2EE4R7J	J	AA	4.7 ohms,1/4W
R945	VRD-ST2EE6R8J	J	AA	6.8 ohms,1/4W
R946	VRD-ST2EE4R7J	J	AA	4.7 ohms,1/4W
R947,948	VRD-ST2EE6R8J	J	AA	6.8 ohms,1/4W
R949	VRD-ST2EE4R7J	J	AA	4.7 ohms,1/4W
R951	VRD-ST2EE4R7J	J	AA	4.7 ohms,1/4W
R955	VRD-ST2CD103J	J	AA	10 kohm,1/6W [PC671H Only]
R956	VRD-ST2CD562J	J	AA	5.6 kohms,1/6W [PC671H Only]
R957	VRD-ST2CD102J	J	AA	1 kohm,1/6W [PC671H Only]
R959	VRD-ST2CD392J	J	AA	3.9 kohms,1/6W [PC671H Only]
R960	VRD-ST2CD104J	J	AA	100 kohm,1/6W [PC671H Only]
R961	VRD-ST2CD393J	J	AA	39 kohms,1/6W [PC671H Only]
R963	VRS-VV3DA681J	J	AC	680 ohms,2W
R964,965	VRD-ST2CD472J	J	AA	4.7 kohms,1/6W
R966	VRD-ST2CD153J	J	AA	15 kohms,1/6W
R967	VRD-ST2CD683J	J	AA	68 kohms,1/6W
R968	VRD-ST2CD102J	J	AA	1 kohm,1/6W
R969	VRD-RT2HD121J	J	AA	120 ohms,1/2W
R974,975	VRD-ST2EE6R8J	J	AA	6.8 ohms,1/4W [PC671H Only]
R976	VRD-ST2EE680J	J	AA	68 ohms,1/4W [PC671H Only]
R979,980	VRD-ST2CD102J	J	AA	1 kohm,1/6W
R981	VRD-ST2CD473J	J	AA	47 kohms,1/6W
R982	VRD-ST2CD274J	J	AA	270 kohms,1/6W
RD01	VRD-MN2BD821J	J	AA	820 ohms,1/8W
RD02	VRD-ST2CD122J	J	AA	1.2 kohms,1/6W
RD03	VRD-MN2BD152J	J	AA	1.5 kohms,1/8W
RD04	VRD-MN2BD182J	J	AA	1.8 kohms,1/8W
RD05	VRD-MN2BD222J	J	AA	2.2 kohms,1/8W
RD06	VRD-MN2BD332J	J	AA	3.3 kohms,1/8W
RD07	VRD-ST2CD392J	J	AA	3.9 kohms,1/6W
RD09	VRD-MN2BD682J	J	AA	6.8 kohms,1/8W
RD10	VRD-MN2BD821J	J	AA	820 ohms,1/8W
RD11	VRD-MN2BD122J	J	AA	1.2 kohms,1/8W
RD12	VRD-ST2CD152J	J	AA	1.5 kohms,1/6W
RD13	VRD-ST2CD182J	J	AA	1.8 kohms,1/6W
RD14	VRD-ST2CD222J	J	AA	2.2 kohms,1/6W
RD15	VRD-MN2BD332J	J	AA	3.3 kohms,1/8W
RD16	VRD-MN2BD392J	J	AA	3.9 kohms,1/8W
RD17	VRD-MN2BD682J	J	AA	6.8 kohms,1/8W
RD18	VRD-MN2BD123J	J	AA	12 kohms,1/8W
RD19	VRD-MN2BD223J	J	AA	22 kohms,1/8W
RD20	VRD-MN2BD683J	J	AA	68 kohms,1/8W
RD21	VRD-MN2BD821J	J	AA	820 ohms,1/8W
RD22	VRD-MN2BD122J	J	AA	1.2 kohms,1/8W
RD23	VRD-MN2BD152J	J	AA	1.5 kohms,1/8W
RD24	VRD-ST2CD182J	J	AA	1.8 kohms,1/6W
RD25	VRD-MN2BD222J	J	AA	2.2 kohms,1/8W [PC651H Only]
RD26	VRD-ST2CD332J	J	AA	3.3 kohms,1/6W [PC651H Only]
RD27	VRD-MN2BD392J	J	AA	3.9 kohms,1/8W
RD28	VRD-MN2BD682J	J	AA	6.8 kohms,1/8W
RD29	VRD-ST2CD123J	J	AA	12 kohms,1/6W
RD30	VRD-MN2BD223J	J	AA	22 kohms,1/8W
RD31	VRD-MN2BD683J	J	AA	68 kohms,1/8W
RD32	VRD-ST2CD562J	J	AA	5.6 kohms,1/6W [PC671H Only]
RS701~706	VRD-MN2BD471J	J	AA	470 ohms,1/8W
RS707	VRD-ST2CD471J	J	AA	470 ohms,1/6W
RS711	VRD-ST2CD152J	J	AA	1.5 kohms,1/6W
RS712	VRD-MN2BD122J	J	AA	1.2 kohms,1/8W
RT21	VRD-ST2CD104J	J	AA	100 kohm,1/6W
RT26	VRD-ST2CD102J	J	AA	1 kohm,1/6W
RT28	VRD-MN2BD102J	J	AA	1 kohm,1/8W
RT29	VRD-ST2CD102J	J	AA	1 kohm,1/6W
RT30	VRD-MN2BD102J	J	AA	1 kohm,1/8W
RT32	VRD-ST2CD103J	J	AA	10 kohm,1/6W
RT33,34	VRD-ST2CD563J	J	AA	56 kohms,1/6W
RT35~37	VRD-ST2CD224J	J	AA	220 kohms,1/6W
RT48,49	VRD-ST2EE391J	J	AA	390 ohms,1/4W

OTHER CIRCUITRY PARTS

BI1	QCNWN1473AWZZ	J	AF	Connector Ass'y,2Pin
BI99/CNS99	QCNWN1373AWZZ	J	AG	Connector Ass'y,3/3Pin
BI401/CNS11	QCNWN1462AWZZ	J	AH	Connector Ass'y,6/6Pin
BI701/CNSM1	QCNWN0907AWZZ	J	AC	Connector Ass'y,8-12Pin
BI702/CNS12	QCNWN1381AWZZ	J	AL	Connector Ass'y,15/15Pin
BI703/CNS806	QCNWN1475AWZZ	J	AF	Connector Ass'y,7/7Pin
BI801	QCNWN1480AWZZ	J	AD	Connector Ass'y,2Pin
BIM5/CNS10/CNS5	QCNWN1184AWZZ	J	AL	Connector Ass'y,6/10/2Pin
CNP1	92LCONE5P53253	J	AB	Plug,5Pin
CNP2	QCNCM705HAFZZ	J	AB	Plug,8Pin
CNP3	92LCONE6P53253	J	AC	Plug,6Pin
CNP3A	92LCONE6P53254	J	AC	Plug,6Pin
CNP10	QCNCM705KAWZZ	J	AC	Plug,10Pin
CNP11	QCNCM704FAWZZ	J	AC	Plug,6Pin
CNP12	QCNCM704QAWZZ	J	AG	Plug,15Pin
CNP99	QCNCM704CAWZZ	J	AC	Plug,3Pin
CNP101	92LCONE3P53253	J	AB	Plug,3Pin
CNP102	92LCONE7P53253	J	AC	Plug,7Pin
CNP301	92LCONE2P5268	J	AB	Plug,2Pin
CNP303	QCNCW010KAWZZ	J	AD	Plug,10Pin
CNP304	QCNCM010KAWZZ	J	AC	Plug,10Pin
CNP501	QCNCW010QAWZZ	J	AE	Socket,15Pin
CNP502	QCNCWZG23AWZZ	J	AK	Socket,23Pin [PC651H]
CNP502	QCNCWZG25AWZZ	J	AE	Socket,25Pin [PC671H]
CNP601	92LCONE5P52287	J	AC	Socket,5Pin
CNP701	QCNCWZF23AWZZ	J	AK	Socket,23Pin [PC651H]
CNP701	QCNCWZF25AWZZ	J	AE	Socket,25Pin [PC671H]
CNP801	QCNCM036BAWZZ	J	AC	Plug,2Pin
CNP802	QCNCM035GAWZZ	J	AC	Plug,7Pin
CNP803	QCNCM010QAWZZ	J	AD	Plug,15Pin
CNP804	92LCONE2P5267	J		Plug,2Pin
CNP805	QCNCM046CAWZZ	J	AD	Plug,3Pin
CNP806	92LCONE7P53253	J	AC	Plug,7Pin
CNPM1	QCNCM932MAFZZ	J	AE	Plug,12Pin
CNPM2	QCNCM030BAWZZ	J	AB	Pin Header,2Pin
CNS1A/B	QCNWN1181AWZZ	J	AK	Connector Ass'y,5-5Pin
CNS2A/B	QCNWN1182AWZZ	J	AH	Connector Ass'y,8-8Pin
CNS3A/B	QCNWN1183AWZZ	J	AG	Connector Ass'y,6-6Pin
CNS101	QCNWN1187AWZZ	J	AG	Connector Ass'y,3Pin
CNS102	QCNWN1188AWZZ	J	AM	Connector Ass'y,7Pin
CNS303	QCNCM010KAWZZ	J	AC	Socket,10Pin
CNS801	QCNCM036BAWZZ	J	AC	Connector Ass'y,2Pin
CNS804	QCNWN1463AWZZ	J	AC	Connector Ass'y,2Pin
⚠ F802,803	92LFUSE-T502-E	J	AD	Fuse,T5A L 250V
⚠ F804	92LFUSET312E	J	AD	Fuse,T3.15A L 250V
⚠ F805	92LFUSE-T162-E	J	AD	Fuse,T1.6A L 250V

NO.	PARTS CODE	★	PRICE RANK	DESCRIPTION
⚠ F832	92LFUSE-T501E	J	AD	Fuse,T500mA L 250V
⚠ F901,902	92LFUSET312E	J	AD	Fuse,T3.15A L 250V
⚠ F903	92LFUSET312E	J	AD	Fuse,T3.15A L 250V [PC671H Only]
FE301	RTUNS0012AWZZ	J	AV	FM Front End
FFC701	QCNWN1461AWZZ	J	AG	Flat Cable,25Pin
FL701	VVKBJ685GNK-1	J	AV	FL Display
FW601	QCNWN1477AWZZ	J	AD	Flat Cable,5Pin
FW701	QCNWN1092AWZZ	J	AE	Flat Cable,6Pin
FWM1	QCNWN1274AWZZ	J	AC	Flat Cable,2Pin
FWM2	QCNWN0338AWZZ	J	AD	Flat Cable,2Pin
IC99	VHPGP1F32T/-1	J	AP	Optical Fiber Data Link,GP1F32T
JK401	QSOCJ0405AWZZ	J	AH	Jack,Video In
JK601	QJAKM0004AWZZ	J	AK	Jack,Headphones
M1	92LMTR1858CASY	J	AS	Motor with Chassis [Spindle]
M2	92LMTR1854BASY	J	AP	Motor with Gear [Sled]
M3	RMOTV0373AFZZ	J	AL	Motor with Worm Pulley [T/T Up/Down Loading]
M901	92LMTR1810A	J	AK	Motor,Air Cooling Fan
MM1(260-7)	RMOTV0006AWM1	J	AR	Motor with Pulley [Tape]
PHM1	VHPI31535CD-1	J	AG	Photo Interrupter
RL801	RRLYD0011AWZZ	J	AE	Relay
RL901,902	RRLYD0004AWZZ	J	AP	Relay
RX701	VHLN63H380A-1	J	AK	Remote Sensor,N63H380A
SO301	QTANC0101AWZZ	J	AF	Terminal,Antenna
SO901	QTANA1001AWZZ	J	AC	Terminal,Speaker [PC651H]
SO901	QTANA1201AWZZ	J	AM	Terminal,Speaker [PC671H]
SOLM1(260-8)	RPLU-0002AWZZ	J	AH	Solenoid Ass'y [Tape]
SOLM2	RPLU-0002AWZZ	J	AH	Solenoid Ass'y [CD]
SW1	QSW-P0004AWZZ	J	AE	Switch,Push Type [Open/Close]
SW2	QSW-F0001AWZZ	J	AD	Switch,Leaf/Skeleton Type [Mecha Up]
SW3	QSW-P0005AWZZ	J	AD	Switch,Push Type [Disc Number]
SW4	QSW-F9001AW01	J	AD	Switch,Leaf Type [Pickup In]
SW701	92LSWICH1401AT	J	AC	Switch,Key Type [ON/Stand-by]
SW702	92LSWICH1401A	J	AD	Switch,Key Type [STATION]
SW703	92LSWICH1401AT	J	AC	Switch,Key Type [CLOCK]
SW704	92LSWICH1401AT	J	AC	Switch,Key Type [TIMER/SLEEP]
SW705	92LSWICH1401AT	J	AC	Switch,Key Type [DISC 1]
SW706	92LSWICH1401AT	J	AC	Switch,Key Type [DISC 2]
SW707	92LSWICH1401AT	J	AC	Switch,Key Type [DISC 3]
SW708	92LSWICH1401AT	J	AC	Switch,Key Type [DISC SKIP]
SW709	92LSWICH1401AT	J	AC	Switch,Key Type [OPEN/CLOSE]
SW710	92LSWICH1401AT	J	AC	Switch,Key Type [REW]
SW711	92LSWICH1401AT	J	AC	Switch,Key Type [REC PAUSE]
SW712	92LSWICH1401AT	J	AC	Switch,Key Type [MEMORY/SET]
SW713	92LSWICH1401AT	J	AC	Switch,Key Type [STOP]
SW714	92LSWICH1401AT	J	AC	Switch,Key Type [TUNER/BAND]
SW715	92LSWICH1401AT	J	AC	Switch,Key Type [VIDEO]
SW716	92LSWICH1401AT	J	AC	Switch,Key Type [TAPE]
SW717	92LSWICH1401AT	J	AC	Switch,Key Type [CD]
SW718	92LSWICH1401A	J	AD	Switch,Key Type [PTY/TI SEARCH]
SW719	92LSWICH1401A	J	AD	Switch,Key Type [EON]
SW720	92LSWICH1401A	J	AD	Switch,Key Type [ASPM]
SW721	92LSWICH1401A	J	AD	Switch,Key Type [DISPLAY/MODE]
SW722	92LSWICH1401AT	J	AC	Switch,Key Type [FF]
SW723	92LSWICH1401AT	J	AC	Switch,Key Type [TUNING UP]
SW724	92LSWICH1401AT	J	AC	Switch,Key Type [TUNING DOWN]
SW725	92LSWICH1401AT	J	AC	Switch,Key Type [PLAY]
SW726	92LSWICH1401A	J	AD	Switch,Key Type [VOLUME DOWN] [PC651H Only]
SW727	92LSWICH1401A	J	AD	Switch,Key Type [VOLUME UP] [PC651H Only]
SW728	92LSWICH1401AT	J	AC	Switch,Key Type [X-BASS/DEMO]
SW729	92LSWICH1401AT	J	AC	Switch,Key Type [EQUALIZER]
SW730	92LSWICH1401AT	J	AC	Switch,Key Type [DIMMER]
SW731	92LSWICH1401AT	J	AC	Switch,Key Type [PHANTOM]
SW732	92LSWICH1401AT	J	AC	Switch,Key Type [NORMAL]
SW733	92LSWICH1401AT	J	AC	Switch,Key Type [BYPASS]
SWM3(260-9)	92LM-SW1676A	J	AC	Switch,Leaf Type [Fool Proof]
SWM4(260-10)	QSW-F9003AWZZ	J	AG	Switch,Leaf Type [F.A.S.]
SWM5(260-11)	92LM-SW1658A	J	AB	Switch,Leaf Type [CAM]
VR702	QSW-Z0005AWZZ	J	AM	Switch,Push Type [Volume Jog] [PC671H Only]

CD MECHANISM PARTS

NO.	PARTS CODE	★	PRICE RANK	DESCRIPTION
301	NGERH0011AWZZ	J	AC	Gear,Middle
302	NGERH0012AWZZ	J	AC	Gear,Drive
303	MLEVP0010AWZZ	J	AC	Rail,Guide
304	NSFTM0002AWFW	J	AE	Shaft,Guide
305	92LM-CUSN1524A	J	AC	Cushion
⚠ 306	92LHPC1MASY	J	BG	Pickup Unit Ass'y
306- 1	———		—	Pickup Unit (Not Replacement Item)
306- 2	NGERR0043AFZZ	J	AC	Gear,Rack
306- 3	MSPRC0961AFZZ	J	AA	Spring,Rack
701	XBSSD26P06000	J	AA	Screw,ø2.6x6mm
702	XHBSD20P05000	J	AA	Screw,ø2x5mm
703	XBBSD20P03000	J	AA	Screw,ø2x3mm
704	LX-WZ1070AFZZ	J	AA	Washer,ø1.5xø3.8x0.25mm
M1	92LMTR1858CASY	J	AS	Motor with Chassis [Spindle]
M2	92LMTR1854BASY	J	AP	Motor with Gear [Sled]
SW4	QSW-F9001AW01	J	AD	Switch,Leaf Type [Pickup In]

CABINET PARTS

NO.	PARTS CODE	★	PRICE RANK	DESCRIPTION
201	GCAB-1044AWSA	J	AM	CD Player Base
202	92LCAB0355AS1	J		Front Panel Ass'y [PC671H]
202	92LCAB3057AS1	J	BB	Front Panel Ass'y [PC651H]
202- 1	———		—	Front Panel (Not Replacement Item)
202- 2	JKNBZ0557AWSA	J	AE	Button,Disc No.
202- 3	JKNBZ0558AWSA	J	AE	Button,Open/Close/Disc Skip
202- 4	JKNBZ0628AWSA	J	AE	Button,ON/Stand-by
202- 5	JKNBZ0560AWSA	J	AE	Button,X-BASS/Demo
202- 6	JKNBZ0563AWSA	J	AG	Button,FF/REW/Tuning
202- 7	JKNBZ0565AWSA	J	AD	Button,Timer/Sleep/Clock
202- 8	JKNBZ0570AWSA	J	AD	Button,Dimmer/Equalizer
202- 9	JKNBZ0601AWSA	J	AE	Button,Dolby Pro Logic
202-10	JKNBZ0561AWSA	J	AF	Button,Function [PC651H]
202-10	KNOB3051AASY1	J	AK	Button,Function [PC671H]
202-11	HDECQ0412AWSA	J	AC	Operation Ring A
202-12	HDECQ0413AWSA	J	AF	Operation Ring B
202-13	HDECQ0414AWSA	J	AD	Cap,Operation Center
202-14	HDECQ0415AWSA	J	AD	Cover,LED
202-15	HDECQ0417AWSA	J	AE	Panel,Center Cap
202-16	HDECQ0418AWSA	J	AH	Panel,Decoration
202-17	HDECQ0419AWSA	J	AF	Decoration,Play Button
202-18	HDECQ0420AWSA	J	AE	Decoration,Stop Button
202-19	HDECQ0478AWSA	J	AG	Panel,AMP.
202-20	HDECQ0457AWSA	J	AC	Panel,Play Decoration
202-21	HDECQ0458AWSA	J	AC	Panel,Stop Decoration
202-22	MLIFP0006AWZZ	J	AE	Damper,Cassette Holder
202-23	PSHEP0031AWZZ	J	AC	Sheet,Reflector [PC671H Only]
202-24	JKNBZ0567AWSA	J	AF	Button,Volume [PC651H Only]
202-25	HDECQ0411AWSA	J	AE	Volume Ring
202-26	JKNBZ0614AWSA	J	AE	Button,RDS Operation
203	92LMEC3022CTS1	J	AM	Cassette,Holder Ass'y,Tape 1 [PC651H]
203	92LMEC3051CTS1	J	AN	Cassette,Holder Ass'y,Tape 1 [PC671H]
203- 1	———		—	Cassette Holder,Tape 1 (Not Replacement Item)
203- 2	GCOVA1221AWSA	J	AH	Cassette Cover,Tape 1 [PC651H]
203- 2	GCOVA1221AWSB	J	AH	Cassette Cover,Tape 1 [PC671H]
203- 3	HDECQ0408AWSA	J	AD	Panel,Cassette,Tape 1
204	92LMEC3022CTS2	J	AM	Cassette,Holder Ass'y,Tape 1 [PC651H]
204	92LMEC3051CTS2	J	AN	Cassette,Holder Ass'y,Tape 2 [PC671H]
204- 1	———		—	Cassette Holder,Tape 2 (Not Replacement Item)
204- 2	GCOVA1222AWSA	J	AH	Cassette Cover,Tape 2 [PC651H]
204- 2	GCOVA1222AWSB	J	AH	Cassette Cover,Tape 2 [PC671H]
204- 3	HDECQ0409AWSA	J	AD	Panel,Cassette,Tape 2
205	KNOB3051BASY1	J	AG	Button,Volume Ass'y [PC671H Only]
205- 1	———		—	Button,Volume [PC671H Only] (Not Replacement Item)

NO.	PARTS CODE	★	PRICE RANK	DESCRIPTION
205-2	92LCSPR1431C	J	AA	Spring,Ring [PC671H Only]
205-3	GCOVA1233AWZZ	J	AD	Refelector B [PC671H Only]
206	MSPRD0092AWFJ	J	AB	Spring,Cassette,Tape 1
207	MSPRD0093AWFJ	J	AB	Spring,Cassette,Tape 2
208	92LHOLD3022AS1	J	AB	Stabilizer Ass'y
208-1	———		—	Stabilizer (Not Replacement Item)
208-2	PMAGF0001AWZZ	J	AF	Magnet,Stabilizer
208-3	92LSUPT1749D	J	AA	Support,Stabilizer Magnet
209	MLEVP0067AWZZ	J	AC	Lever,Lock
210	LCHSZ0011AWZZ	J	AG	Chassis,CD Mechanism
211	LHLDZ1141AWZZ	J	AB	Support,Pitch
212	MLEVP0066AWZZ	J	AE	Lever,Shift
213	MLEVP0068AWZZ	J	AB	Lever,Change
214	MSPRC0024AWFW	J	AB	Spring,Solenoid
215	NBLTK0033AWZZ	J	AC	Belt,Drive
216	NGERH0064AWZZ	J	AD	Gear,Cam
217	NGERH0065AWZZ	J	AB	Gear,Turntable
218	NGERK0003AWZZ	J	AC	Gear,Drive
219	NGERK0004AWZZ	J	AB	Gear,Bevel
220	NGERK0005AWZZ	J	AB	Gear,Loading
221	NGERW0006AWZZ	J	AC	Gear,Worm Wheel
222	NPLYD0002AWZZ	J	AC	Pulley
223	LANGF0032AWZZ	J	AC	Support,T/T Lock Lever
224	LCHSZ0010AWZZ	J	AM	Chassis,Loading
225	LHLDZ1140AWZZ	J	AB	Guide
226	MLEVP0070AWZZ	J	AB	Lever,T/T Lock
227	MSPRC0020AWFJ	J	AB	Spring,T/T Lock Lever
228	MSPRD0044AWFJ	J	AB	Spring,Lock Lever
229	NROLP0009AWZZ	J	AB	Roller
230	NTNT-0018AWSA	J	AK	Turntable
231	PCOVZ1013AWZZ	J	AB	Cover,Wire
232	PCUSG0022AWZZ	J	AB	Cushion,Leg
233	92LCOV3022AS1	J	AM	CD Tray Cover Ass'y
233-1	———		—	Cover,CD Tray (Not Replacement Item)
233-2	92LBADGE1671A	J	AC	Badge,SHARP
233-3	GCOVA1224AWSA	J	AE	Cover,CD Tray Panel,Left
233-4	GCOVA1225AWSA	J	AE	Cover,CD Tray Panel,Right
234	GCAB-1052AWSA	J	AP	Top Cabinet
235	GCOVA1232AWZZ	J	AC	Cover,Volume Refector A [PC671H Only]
236	92LN-BAND1318A	J	AA	Nylon Band,80mm
237	JKNBK0069AWSA	J	AE	Knob,Sub Woofer [PC671H Only]
238	LANGK0168AWFW	J	AD	Bracket,Main PWB Support
239	PCUSG0022AWZZ	J	AB	Cushion,Leg
240	92LCAB3051BS1	J		Side Panel Ass'y,Left
240-1	———		—	Side Panel,Left (Not Replacement Item)
240-2	PCUSG0022AWZZ	J	AB	Cushion,Leg
241	92LCAB3051CS1	J		Side Panel Ass'y,Right
241-1	———		—	Side Panel,Right (Not Replacement Item)
241-2	PCUSG0022AWZZ	J	AB	Cushion,Leg
242	LANGK0180AWFW	J		Bracket,Motor Fan Support [PC651H Only]
243	LBSHC0002AWZZ	J	AD	Bushing,AC Power Supply Cord
245	LCHSM0085AWFW	J	AR	Main Chassis
246	NFANP0001AWZZ	J	AD	Rotary Fan
247	GITAR0482AWSA	J	AN	Back Board [Except for Russia/Poland/U.K.] [PC671H]
247	GITAR0483AWSA	J		Back Board [For Russia/Poland] [PC671H]
247	GITAR0484AWSA	J		Back Board [For U.K.] [PC671H]
247	GITAR0485AWSA	J	AN	Back Board [Except for Russia/Poland/U.K.] [PC651H]
247	GITAR0486AWSA	J		Back Board [For U.K.] [PC651H]
247	GITAR0487AWSA	J		Back Board [For Russia/Poland] [PC651H]
⚠248	QFSHD0001AWZZ	J	AB	Holder,Fuse
⚠249	QACCB0009AW00	J	AL	AC Power Supply Cord [For Hong Kong/U.K.]
⚠249	QACCE0008AW00	J	AG	AC Power Supply Cord [Except for Hong Kong/U.K.]
250	PRDAR0143AWFW	J		Heat Sink,Main [PC651H]
250	PRDAR0145AWFW	J		Heat Sink,Main [PC671H]
251	QLUGP0002AWZZ	J	AB	Lug Terminal
252	PRDAR0136AWFW	J	AR	Heat Sink,Sub
253	92LCSPR1431C	J	AA	Spring,Ring
254	LHLDZ1225AWZZ	J	AC	Holder,Dolby
255	LHLDZ1227AWZZ	J	AC	Holder,Volume [PC671H Only]
256	LHLDZ1228AWZZ	J	AC	Holder,Play,Stop
257	LHLDZ1226AWZZ	J	AC	Holder,Function [PC671H Only]
258	LHLDZ1213AWZZ	J	AE	Holder,FL
259	LHLDZ1204AWSA	J	AD	Bracket,Stabilizer
260	92LMECHA3051A1	J	BK	Tape Mechanism Ass'y
260-1	NBLTK0011AWZZ	J	AC	Belt,Main
260-2	NBLTK0012AWZZ	J	AB	Belt,Main
260-3	NBLTK0030AWZZ	J	AC	Belt,Sub
260-4	NROLY0002AWZZ	J	AF	Pinch Roller Ass'y
260-5	RHEDA0001AWZZ	J	AG	Head,Erase
260-6	92LMRPH1746A	J	AM	Head,Record/Playback
260-7(MM1)	RMOTV0006AWM1	J	AR	Motor with Pulley
260-8(SOLM1)	RPLU-0002AWZZ	J	AH	Solenoid Ass'y
260-9(SWM3)	92LM-SW1676A	J	AC	Switch,Leaf Type [Fool Proof]
260-10(SWM4)	QSW-F9003AWZZ	J	AG	Switch,Leaf Type [F.A.S.]
260-11(SWM5)	92LM-SW1658A	J	AB	Switch,Leaf Type [CAM]
261	LHLDF1001AWZZ	J	AC	Holder,PWB
262	LANGK0170AWFW	J	AC	Bracket,Headphones Support
263	QCNWN1481AWZZ	J	AD	Lug Wire
264	LHLDZ1229AWZZ	J	AC	Holder,Multi Indicator
265	PSPAI0019AWZZ	J		Spacer
266	LANGT0047AWFW	J	AE	Bracket,Tuner PWB
267	LANGT0048AWFW	J	AD	Bracket,Tuner PWB
601	XEBSF30P12000	J	AA	Screw,ø3x12mm
602	XJBSF30P08000	J	AA	Screw,ø3x8mm
603	XJBSD30P08000	J	AA	Screw,ø3x8mm
604	XJBSD30P10000	J	AA	Screw,ø3x10mm
605	LX-HZ0082AFZZ	J	AA	Screw,ø4x8mm
606	LX-JZ0010AFFD	J	AA	Screw,ø3x10mm
607	XBBSD20P04000	J	AA	Screw,ø2x4mm
608	XJBSF30P10000	J	AA	Screw,ø3x10mm
610	XESSD30P10000	J	AA	Screw,ø3x10mm
611	XJSSF30P10000	J	AA	Screw,ø3x10mm
612	XWHJZ62-09510	J	AB	Washer,ø6.2xø10x0.9mm
613	XEBSD30P10000	J	AA	Screw,ø3x10mm
614	LX-JZ0002AWFD	J	AA	Screw,ø3x10mm
615	LX-EZ0005AWFD	J	AA	Screw,Special
616	XEBSD30P12000	J	AA	Screw,ø3x12mm
617	XBPSD26P05JSO	J	AB	Screw,ø2.6x5mm
618	LX-TZ0019AFZZ	J	AB	Screw,Special
619	XEBSD26P12000	J	AA	Screw,ø2.6x12mm
620	XJBSD30P12000	J	AA	Screw,ø3x12mm
621	XJSSD30P10000	J	AA	Screw,ø3x10mm
622	XJBSD30P14000	J	AA	Screw,ø3x14mm
623	XHBSD30P06000	J	AA	Screw,ø3x6mm
624	XJBSD30P08000	J	AA	Screw,ø3x8mm
625	XEBSD26P08000	J	AA	Screw,ø2.6x8mm

ACCESSORIES/PACKING PARTS

1	SPAKA0210AWZZ	J	AM	Packing Add.,Left/Right,Unit
2	SPAKC0770AWZZ	J	AV	Packing Case [Except for U.K.] [PC671H]
2	SPAKC0771AWZZ	J	AV	Packing Case [For U.K.] [PC671H]
2	SPAKC0774AWZZ	J	AT	Packing Case [For U.K.] [PC651H]
2	SPAKC0775AWZZ	J	AT	Packing Case [Except for U.K.] [PC651H]
3	SPAKP0013AWZZ	J	AC	Polyethylene Bag,Unit
4	TLABE0272AWZZ	J	AB	Label,Bar Code [PC671H]
4	TLABE0274AWZZ	J	AB	Label,Bar Code [PC651H]
5	92LBAG1460C1	J	AB	Polyethylene Bag,Accessories
6	92L41-05-0300	J		Packing Add.,Top/Bottom,Center Speaker/Surround Speaker
7	92L41-08-0350	J		Polyethylene Bag,Center Speaker
8	92L41-08-0350	J		Polyethylene Bag,Surround Speaker
9	92L411-0075	J	AG	Polyethylene Bag,Front Speaker
10	92L411-0101	J	AD	Polyethylene Bag,Sub Woofer
11	92L412-0126	J		Packing Add.,Top/Bottom,Front Speaker
12	92L412-0127	J		Packing Add.,Top/Bottom,Sub Woofer
13	92L414-0023	J	AC	Sheet,Sub Woofer
14	92L416-0060	J		Center Pad,Front Speaker
15	QANTL0008AWZZ	J	AH	AM Loop Antenna
16	RRMCG0182AWSA	J	AR	Remote Control
	GFTAB1022AWSA	J		Battery Lid,Remote Control

CD-PC671H/651H

NO.	PARTS CODE	★	PRICE RANK	DESCRIPTION
17	TINSE0261AWZZ	J	AF	Operation Manual [For U.K.] [PC671H]
17	TINSE0262AWZZ	J	AF	Operation Manual [For U.K.] [PC651H]
17	TINSZ0441AWZZ	J	AR	Operation Manual [Except for Russia/Poland/U.K.] [PC671H]
17	TINSZ0442AWZZ	J	AR	Operation Manual [For Russia/Poland] [PC671H]
17	TINSZ0443AWZZ	J	AR	Operation Manual [Except for Russia/Poland/U.K.] [PC651H]
17	TINSZ0444AWZZ	J		Operation Manual [For Russia/Poland] [PC651H]
18	TLABZ0585AWZZ	J	AC	Label,Feature Tape 1 [PC671H]
18	TLABZ0587AWZZ	J	AC	Label,Feature Tape 1 [PC651H]
19	TLABZ0586AWZZ	J	AB	Label,Feature Tape 2 [PC671H]
19	TLABZ0588AWZZ	J	AC	Label,Feature Tape 2 [PC651H]
20	92LF-ANT1535A	J	AF	FM Antenna

P.W.B. ASSEMBLY (Not Replacement Item)

PWB-A1~4	92LPWB3055MANS	J	—	Main/Display/Switch/Head-phones (Combined Ass'y) [For U.K. Only] [PC671H]
PWB-A1~4	92LPWB3057MANS	J	—	Main/Display/Switch/Head-phones (Combined Ass'y) [For U.K. Only] [PC651H]
PWB-B	92LPWB3022CDUS	J	—	CD Servo [For U.K. Only]
PWB-C1,2	92LPWB3055PWRS	J	—	Power/Digital Output (Combined Ass'y) [For U.K. Only] [PC671H]
PWB-C1,2	92LPWB3057PWRS	J	—	Power/Digital Output (Combined Ass'y) [For U.K. Only] [PC651H]
PWB-D	QPWBF0027AWZZ	J	AD	CD Motor (PWB Only) [For U.K. Only]
PWB-E	QPWBF0341AWZZ	J	AB	Sensor (PWB Only) [For U.K. Only]
PWB-F	QPWBF0106AWZZ	J	AF	Tape Mechanism (PWB Only) [For U.K. Only]
PWB-G	92LPWB3072TUNS	J	—	Tuner [For U.K. Only]

OTHER SERVICE PART

	UDSKA0004AFZZ	J	AZ	CD Pickup Lens Cleaner

CP-PC671H

SPEAKER BOX PARTS FRONT SPEAKER

901	92L10002671H10	J	BB	Cabinet Ass'y
902	92L200L0290010	J	AU	Front Panel,Left
903	92L200R0290010	J	AU	Front Panel,Right
904	92L201L0290010	J	AR	Net Frame Ass'y,Left
905	92L201R0290010	J	AR	Net Frame Ass'y,Right
906	92L3141PC46210	J	AL	Speaker Cord Ass'y (With Capacitor)
907	92L44210310100	J	AD	Cushion Wire
908	92LPCAT1XL12	J	AC	Catching Holder
909	411-B930100P1	J	AC	Screw,ø3×10mm
910	92L44010213300	J	AH	Port Cushion
911	411-B840140B1	J	AC	Screw,ø4×14mm
912	92L6000C671H00	J		Label,Specifications
SP1,2	VSP0013WBK96F	J	BG	Woofer
SP3,4	VSP0050TBM76F	J	AC	Tweeter
SP5,6	92L303R0300110	J	AN	Super Tweeter

CP-PC651H

SPEAKER BOX PARTS FRONT SPEAKER

901	92L121-0168	J	AU	Net Frame Ass'y
902	92L051-0073	J	AW	Cabinet Ass'y
903	92L312-0076	J	AS	Front Panel
904	92L122-0043	J	AG	Speaker Cord Ass'y (With Capacitor)
905	92L319-0027	J	AE	Holder,PL
906	92L372-0106	J	AB	Screw,ø4×12mm
907	92L372-0108	J	AB	Screw,ø3×10mm
908	92L351-0328	J		Label,Specifications
SP1,2	VSP0013WB426A	J	AY	Woofer
SP3,4	VSP0050TBM66A	J	AR	Tweeter

GBOXS0026AWM1

SPEAKER BOX PARTS CENTER SPEAKER

901	92L60-00-0760	J	AR	Net Frame Ass'y
902	92L32-01-0390	J	AW	Bottom Cabinet
903	92L37-03-0120	J	AG	Speaker Cord
904	92L35-02-0320	J	AB	Screw,ø3×14mm
905	92L33-01-0940	J	AC	Label,Parts Code
SP1	VSP0010PBY04A	J	AW	Woofer

GBOXS0027AWM1

SPEAKER BOX PARTS SURROUND SPEAKER

901	92L60-00-0770	J	AT	Net Frame Ass'y
902	92L32-01-0400	J	AQ	Bottom Cabinet
903	92L37-03-0110	J	AK	Speaker Cord
904	92L35-02-0320	J	AB	Screw,ø3×14mm
905	92L33-01-0960	J		Label,Parts Code
SP1,2	VSP0010PBY78A	J	AR	Woofer

CP-SW671H

SPEAKER BOX PARTS SUB WOOFER (PC671H ONLY)

901	92L121-0171	J	AV	Net Frame Ass'y
902	92L132-0001	J	AN	Duct Panel Ass'y
903	92L316-0075	J		Duct
904	92L394-0050	J	AC	Port Cushion
905	92L051-0078	J	AY	Cabinet Ass'y
906	92L372-0049	J	AB	Screw,ø4×12mm
907	92L372-0026	J	AB	Screw,ø3×10mm
908	92L351-0337	J		Label,Specifications
909	92L291-0081	J	AH	Speaker Cord Ass'y
SP1	VSP0013WB416A	J	BA	Woofer

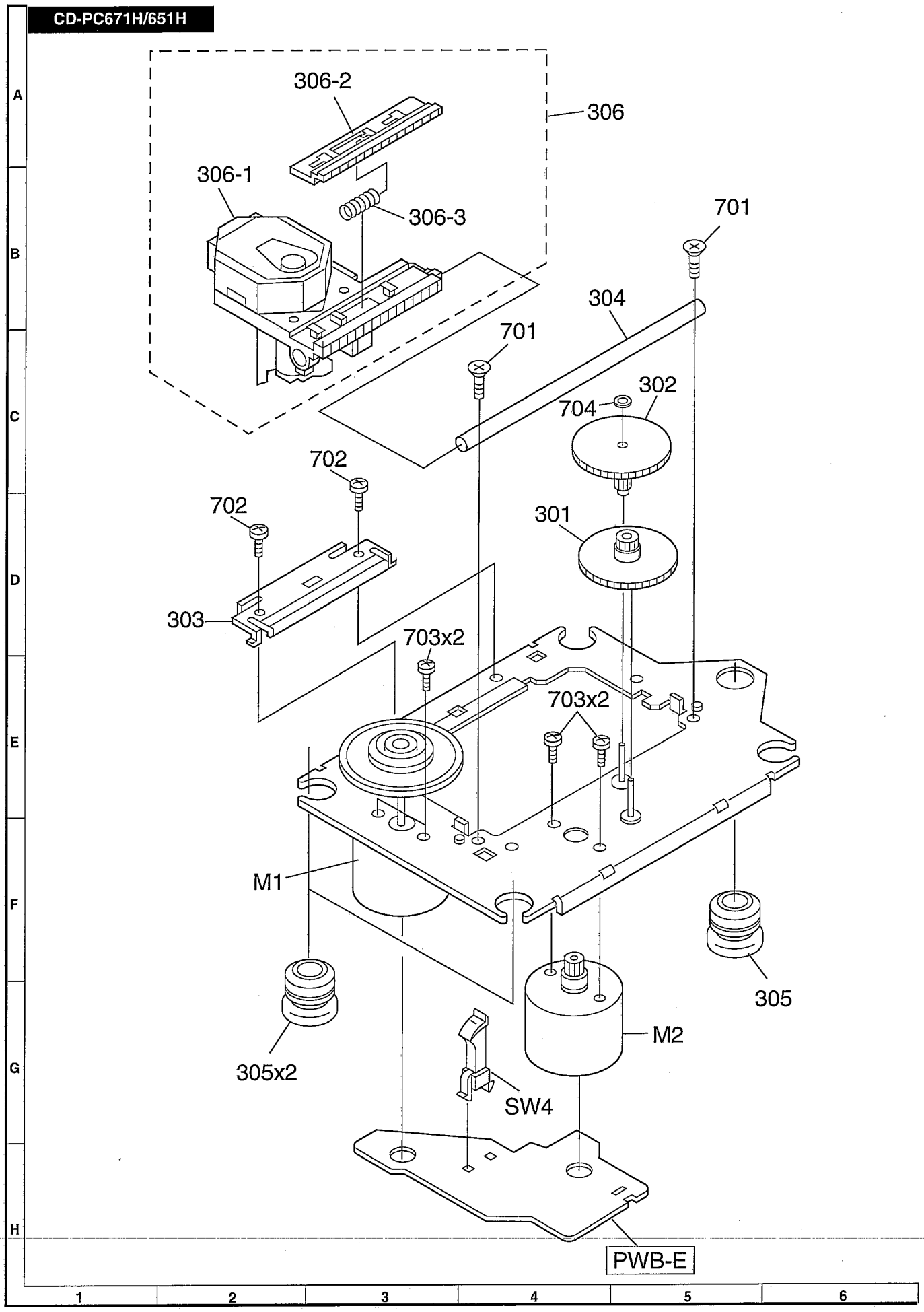

Figure 10 CD MECHANISM EXPLODED VIEW

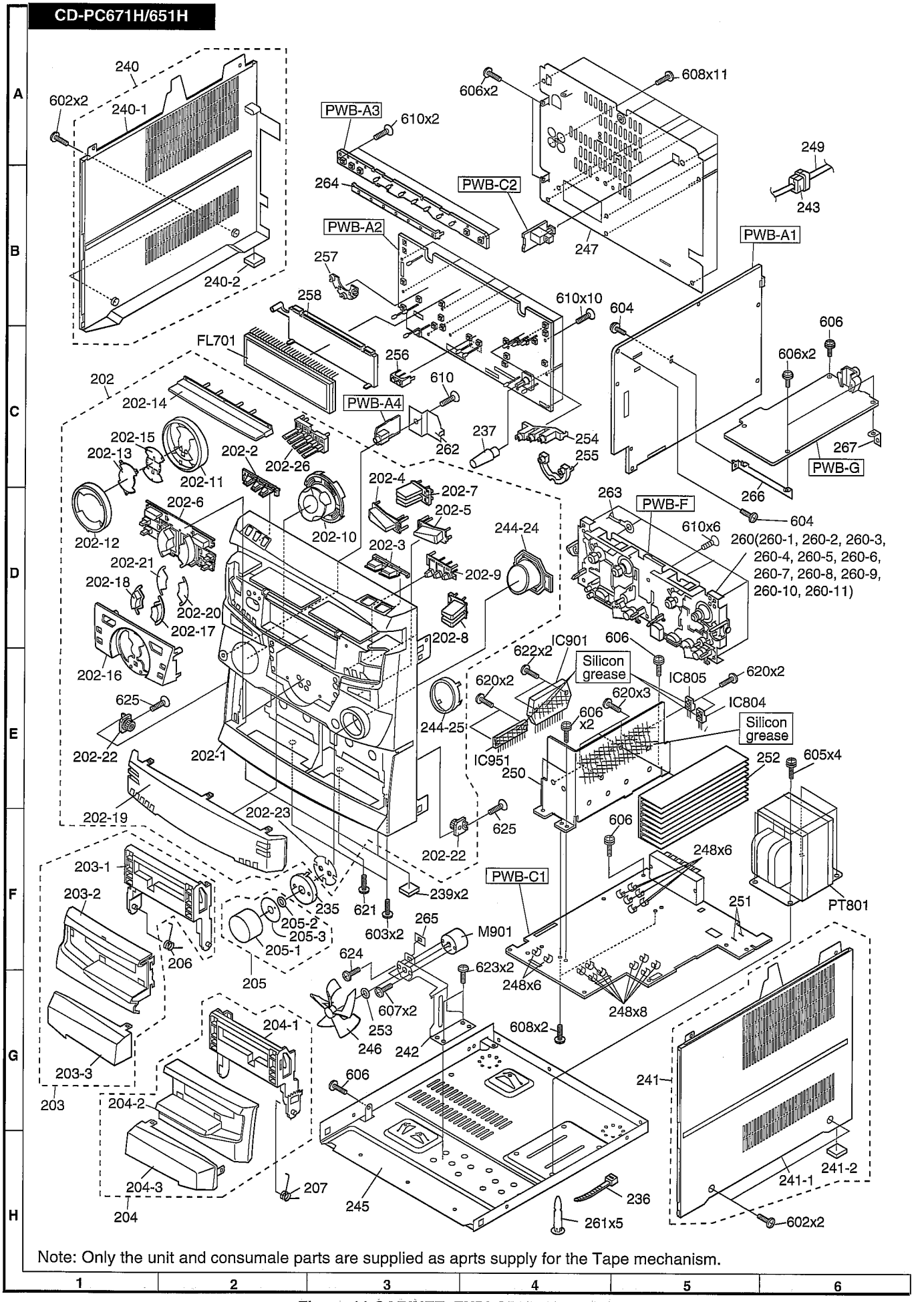

Note: Only the unit and consumale parts are supplied as aprts supply for the Tape mechanism.

Figure 11 CABINET EXPLODED VIEW (1/2)

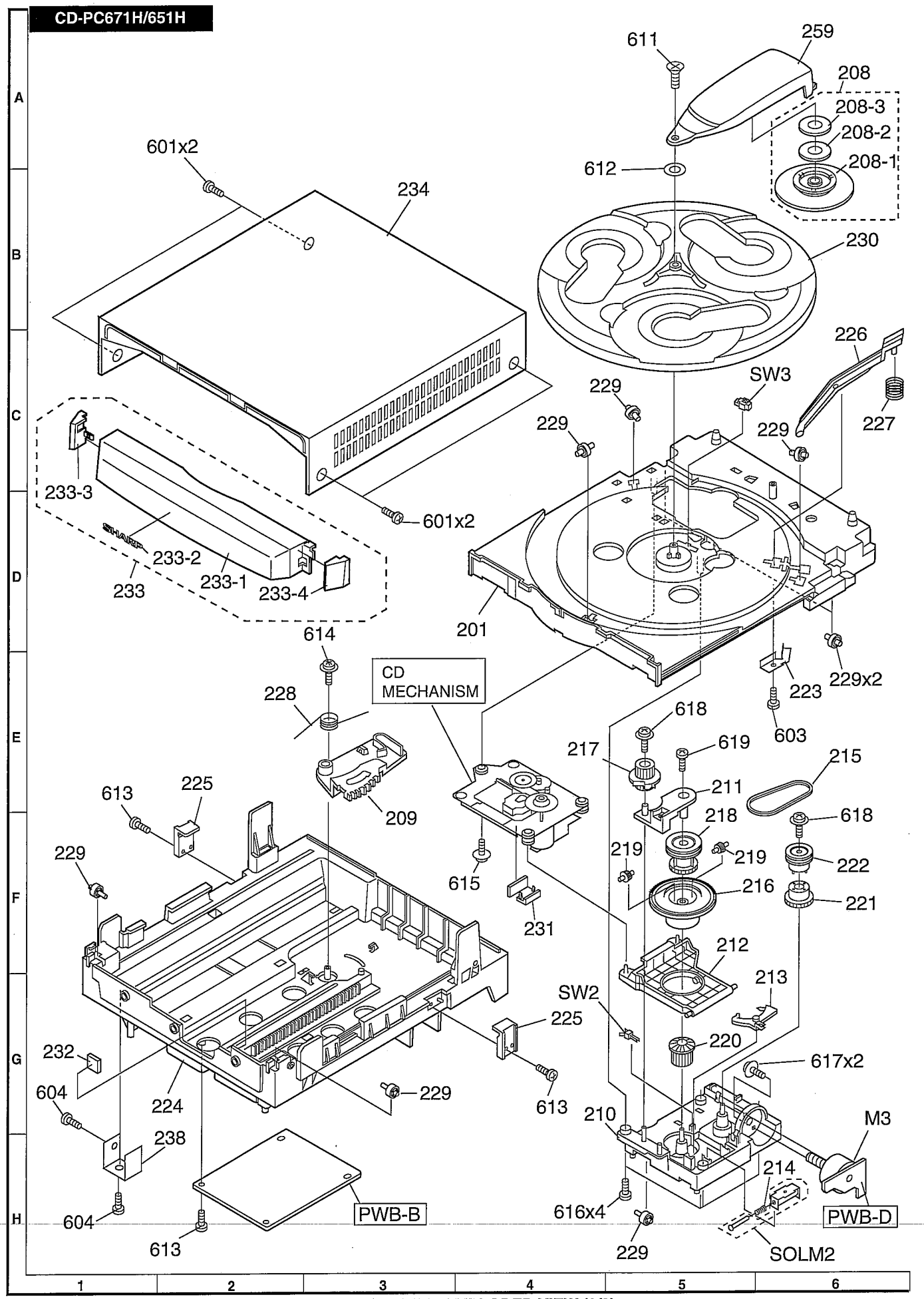

Figure 12 CABINET EXPLODED VIEW (2/2)

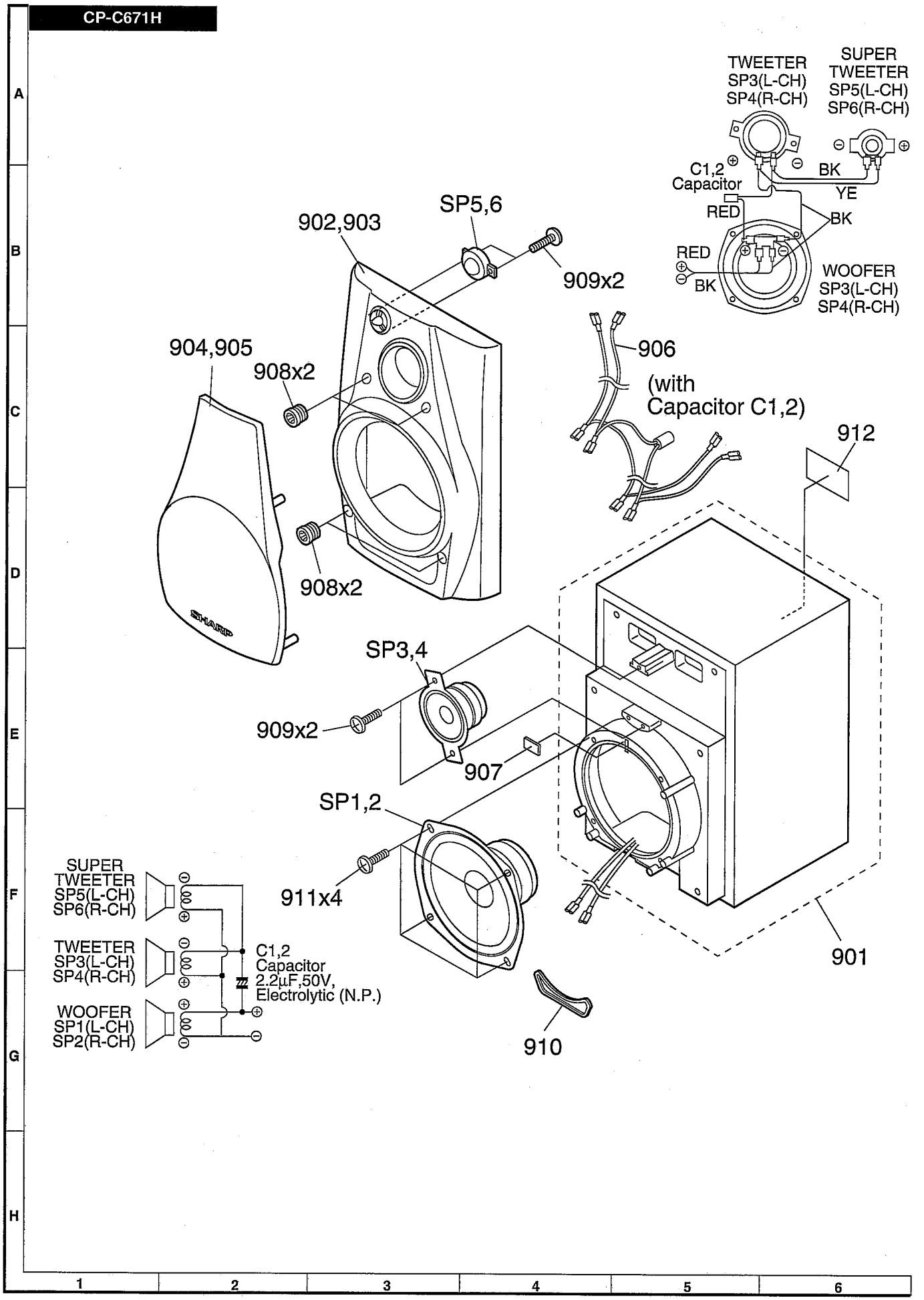

Figure 13 SPEAKER EXPLODED VIEW (1/3)

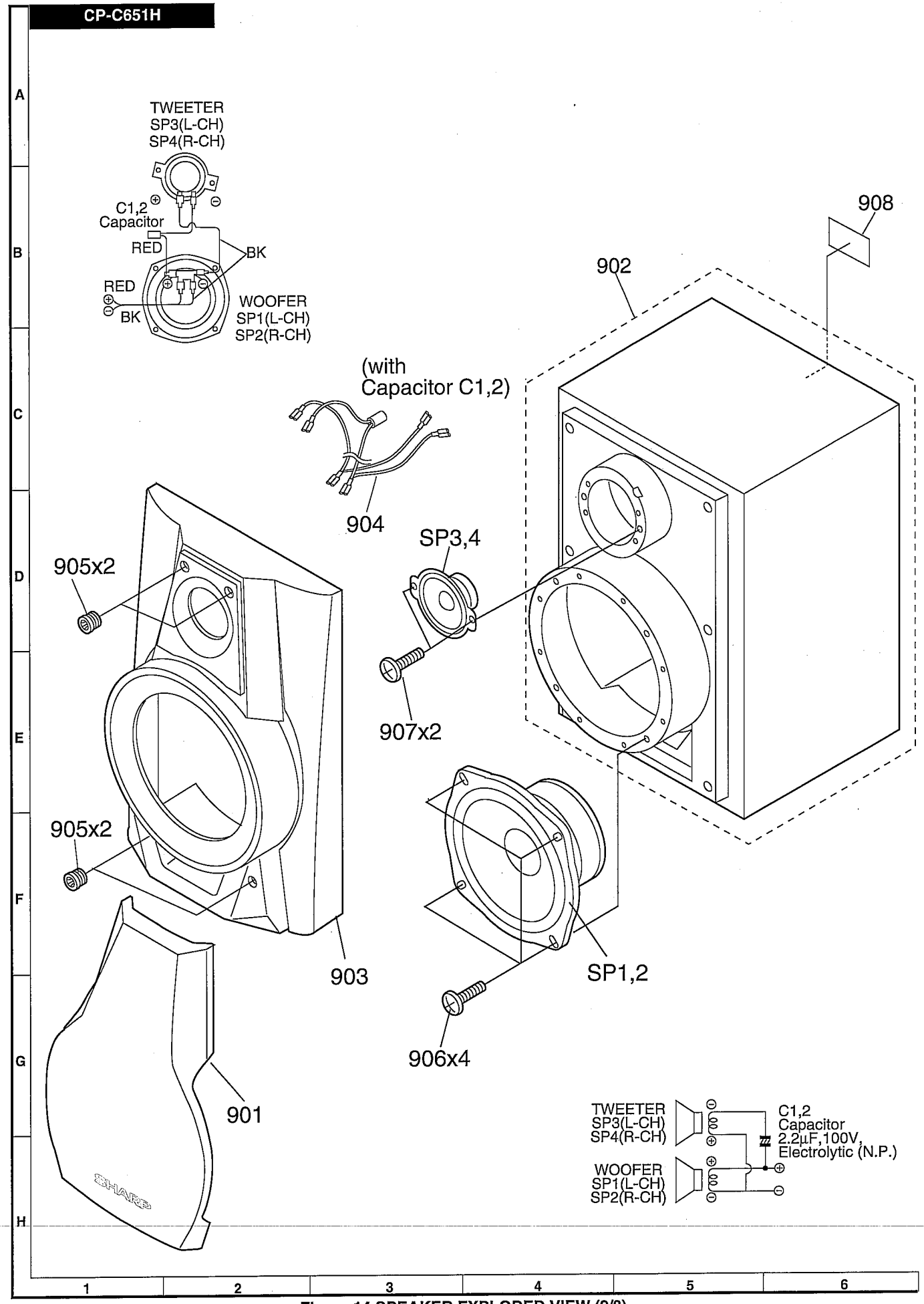

Figure 14 SPEAKER EXPLODED VIEW (2/3)

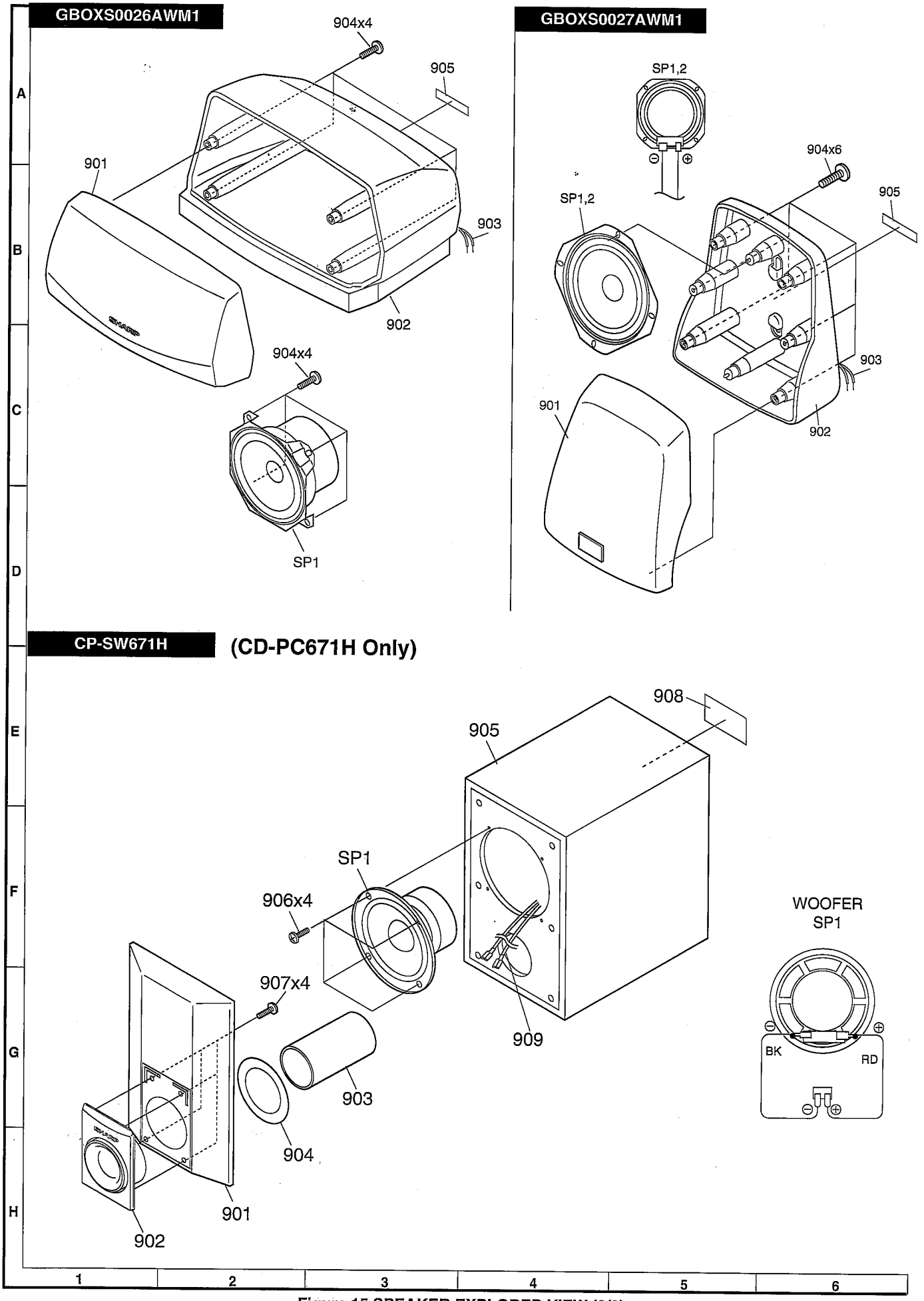

Figure 15 SPEAKER EXPLODED VIEW (3/3)

PACKING METHOD (FOR U.K. ONLY)

Setting position of switches and knobs	
Tape Mechanism	STOP

CD-PC671H/651H

1	Packing Add., Left/Right, Unit	SPAKA0210AWZZ
2	Packing Case(CD-PC671H)	SPAKC0771AWZZ
2	Packing Case(CD-PC651H)	SPAKC0774AWZZ
3	Polyethylene Bag, Unit	SPAKP0013AWZZ
4	Label, Bar Cord(CD-PC671H)	TLABE0272AWZZ
4	Label, Bar Cord(CD-PC651H)	TLABE0274AWZZ
5	Polyethylene Bag, Accessories	92LBAG1460C1
6	Packing Add.,Top/Bottom, Center Speaker/Surround Speaker	92L41-05-0300
7	Polyethylene Bag, Center Speaker	92L41-08-0350
8	Polyethylene Bag, Surround Speaker	92L41-08-0350
9	Polyethylene Bag, Front Speaker	92L411-0075
10	Polyethylene Bag, Sub Woofer (CD-PC671H Only)	92L411-0101
11	Packing Add.,Top/Bottom,Front Speaker	92L412-0126
12	Packing Add.,Top/Bottom,Sub Woofer (CD-PC671H Only)	92L412-0127
13	Sheet,Sub Woofer (CD-PC671H Only)	92L414-0023
14	Center Pad,Front Speaker	92L416-0060
15	AM Loop Antenna	QANTL0008AWZZ
16	Remote Control	RRMCG0182AWSA
17	Operation Manual(CD-PC671H)	TINSE0261AWZZ
17	Operation Manual(CD-PC651H)	TINSE0262AWZZ
18	Label, Featture, Tape1(CD-PC671H)	TLABZ0585AWZZ
18	Label, Featture, Tape1(CD-PC651H)	TLABZ0587AWZZ
19	Label, Featture, Tape2(CD-PC671H)	TLABZ0586AWZZ
19	Label, Featture, Tape2(CD-PC651H)	TLABZ0588AWZZ
20	FM Antenna	92LF-ANT1535A

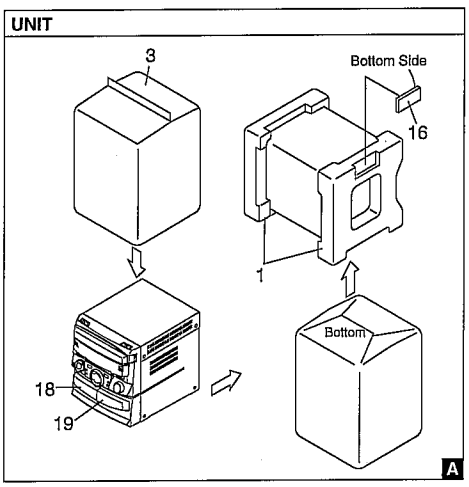

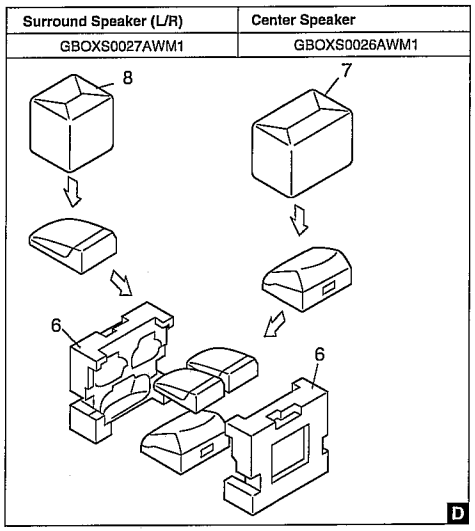

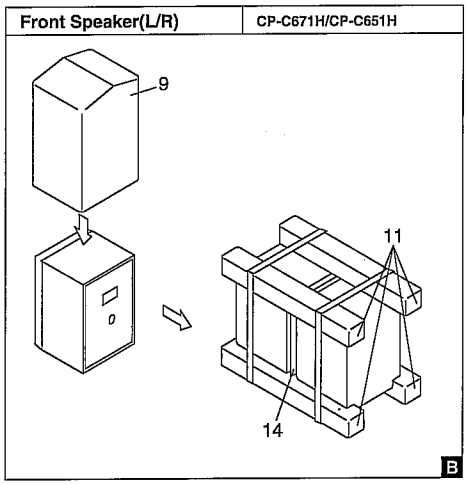

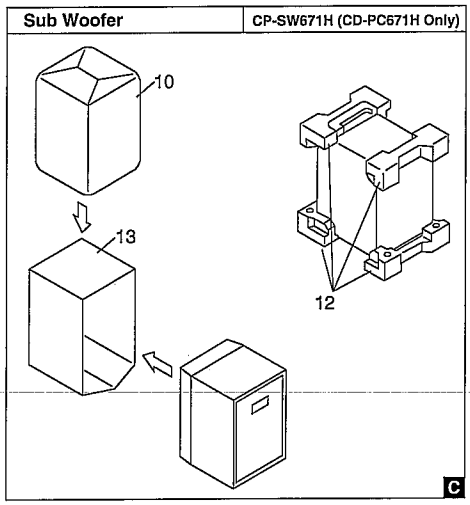

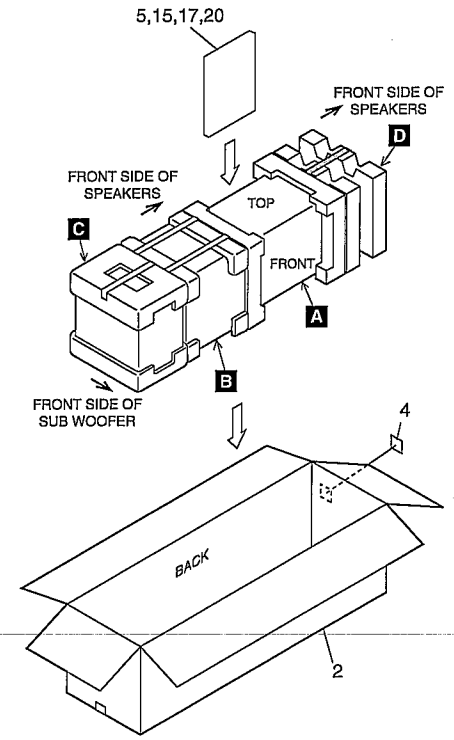

CD-PC671H/651H

2104

SHARP

COPYRIGHT © 1999 BY SHARP CORPORATION

ALL RIGHTS RESERVED.

No part of this publication may be reproduced, stored in a retrieval system, or transmitted in any form or by any means, electronic, mechanical, photocopying, recording, or otherwise, without prior written permission of the publisher.

SHARP CORPORATION
Communication Systems Group
Quality & Reliability Control Center
Higashihiroshima, Hiroshima 739-0192, Japan
Printed in U.K.

A9906-2368NS•HA•M

SG • SK • EX(PILSA)